THOMSON 70MK68

MODEL

SERVICE MANUAL

THOMSON CONSUMER ELECTRONICS

Service

FERNSEHEN
TELEVISION
TÉLÉVISION

Bestell-Nr. 102.675.70

Chassis ICC 9

x	y	z
0	0	0
1	1	1
2	2	2
3	3	3
4	4	4
5	5	5
6	6	6
7	7	7
8	8	8
9	9	9

ACHTUNG! Ersatzteilbestellungen
sind schneller und kostengünstiger über
Fax 0511/418-1260

Stromlaufplan · Lagepläne · Service-Einstellungen
Circuit Diagram · Component Layout Diagram · Service Adjustments
Schéma des connexions · Schémas d'implantation · Réglages service
Schema elettrico · Schema practico · Regolazioni di servizio
Esquema electrico · Esquema practico · Ajustes

Bausteine nicht unter Spannung ziehen!
Servicearbeiten am SM-Netzteil nur über [illegible] ıtrafo durchführen!
Die Geräte tragen das VDE-Zeiche[illegible] vollem Umfang die Sicherheitsbestimmungen des VDE.

Do not disconnect modules when they are energized!
Repairs on SM line section are to be carried out only with isolating transformer.
The receivers have been awarded the VDE seal and fulfill completely the safety requirements of the VDE.

Ne pas retirer les modules lorsqu'ils sont sous tension!
N'effectuer les travaux de maintenance sur le bloc d'alimentation SM qu'avec un transformateur d'isolement!
Les appareils portent le signe VDE (de l'Union des Electriciens Allemands) et sont absolument conformes à ses prescriptions de sécurité.

Non estarre i moduli ad apparecchio acceso.
I lavori di servizio alla sezione rete SM devono essere effettuati solamente mediante il transformatore separatore regolabile.
Gli apparecchi sono corrispondenti in tullo alle norme di sicurezza.

No desconectar los módulos con el aparato encendido.
No trabajar en la fuente de alimentación conmutada sin transformador de aislamiento de Red.
Los aparatos tienen las siglas VDE y cumplen totalmente las normas de seguridad VDE.

Verdrahtungs- und Steckerplan · Wiring and Plug Connection Diagram · Plan de câblage et des connecteurs
Schemi collegamenti e posizione degli spinotti · Plano decables y conexions

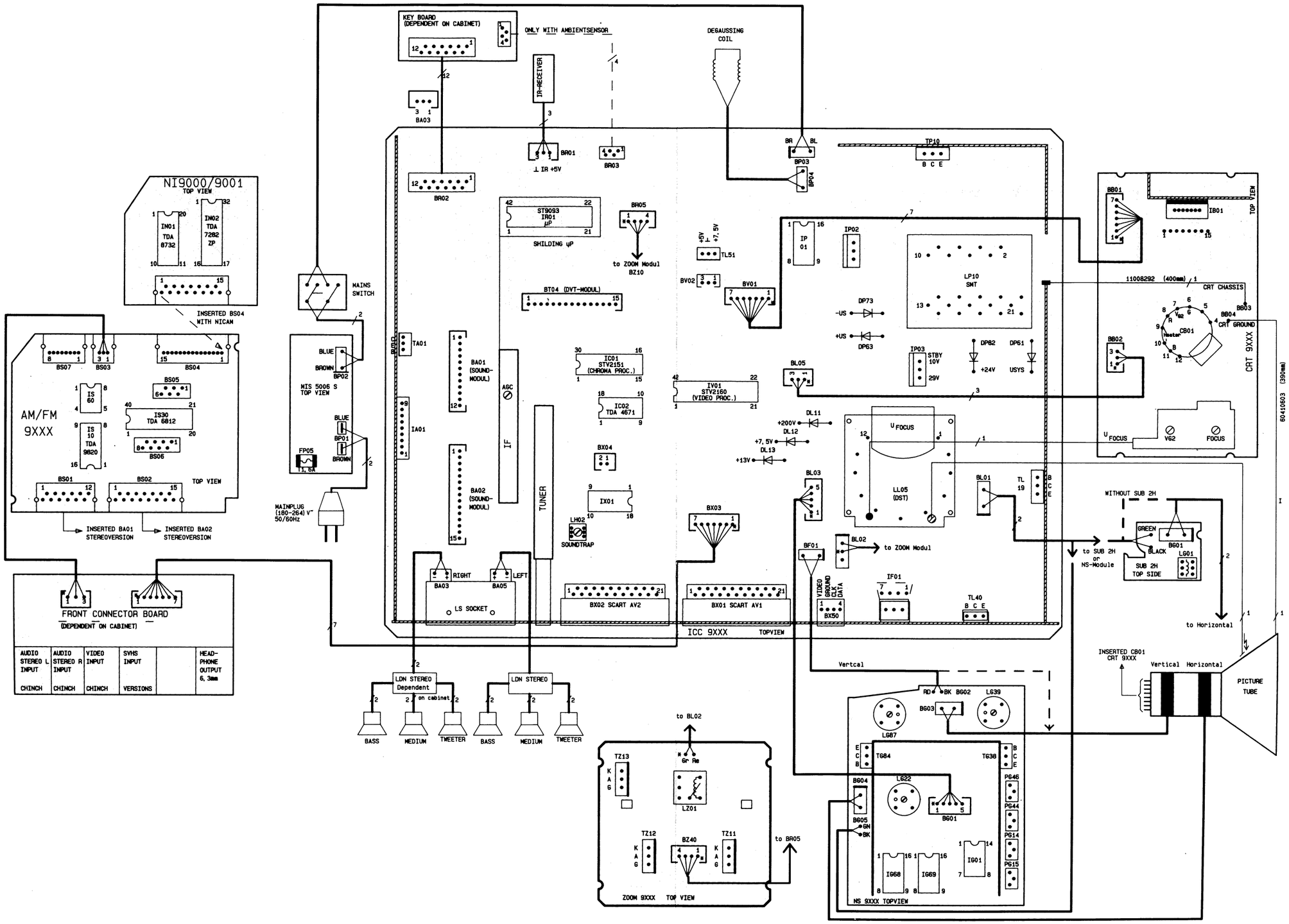

Chassis ICC 9

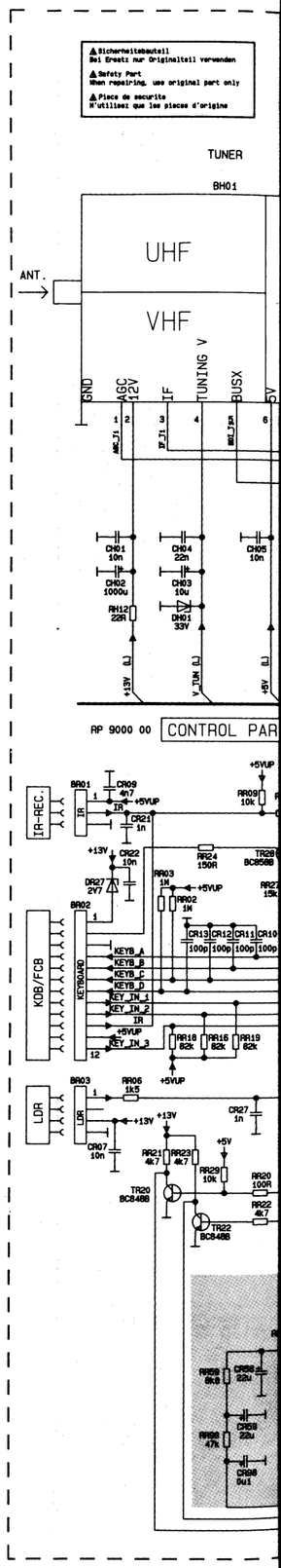

agram · Plan de câblage et des connecteurs
y conexions

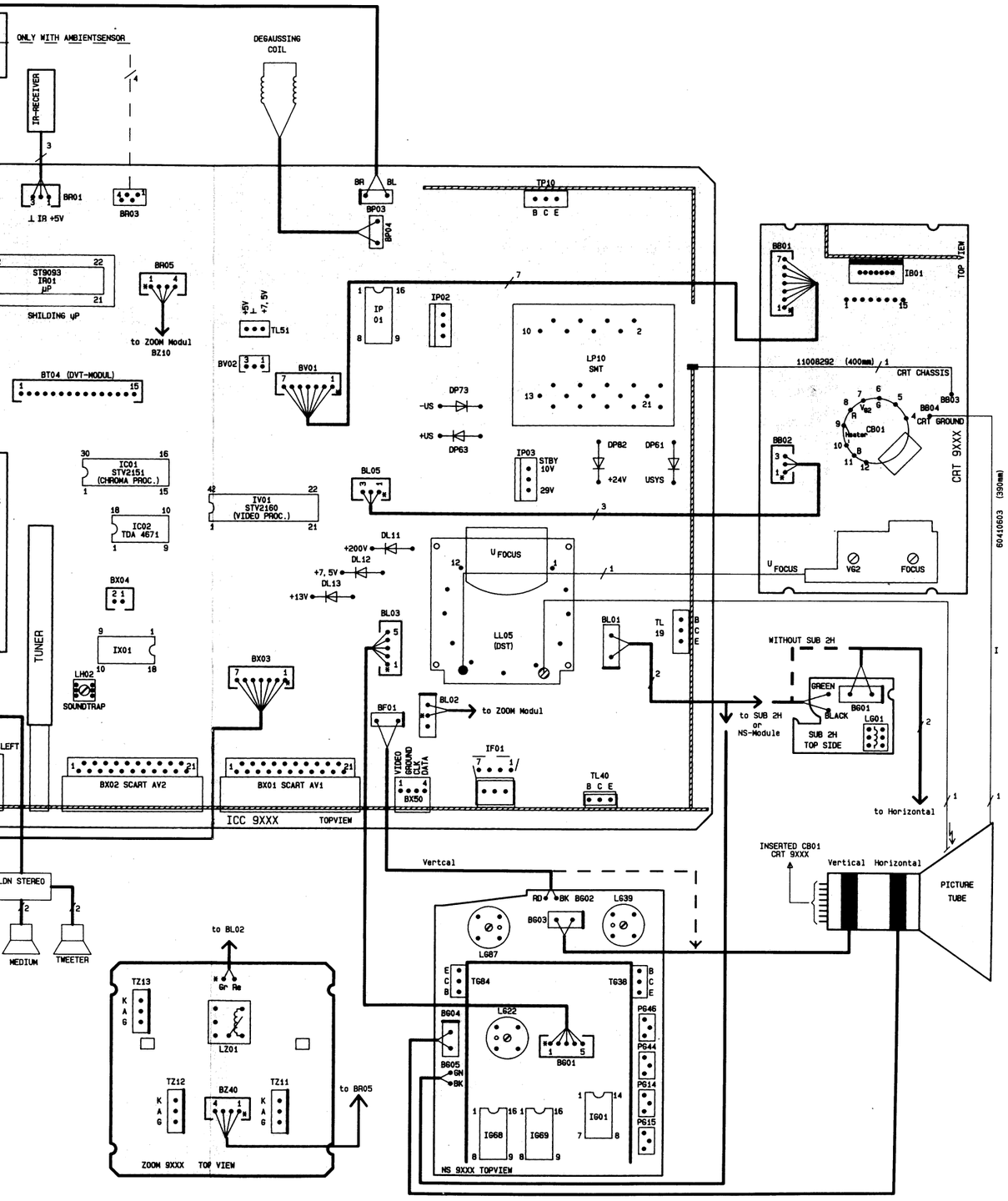

Chassis ICC 9

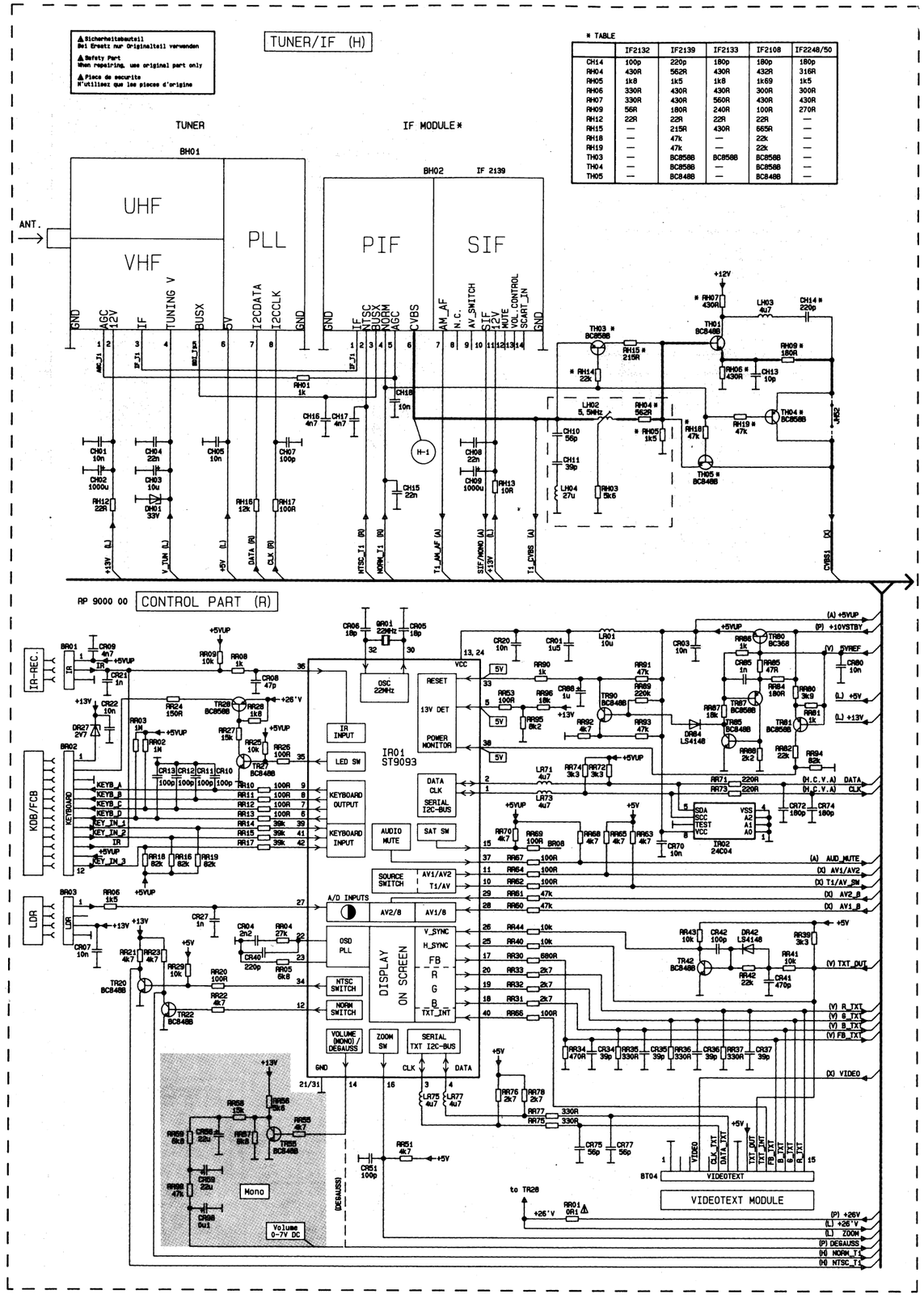

Chassis ICC 9

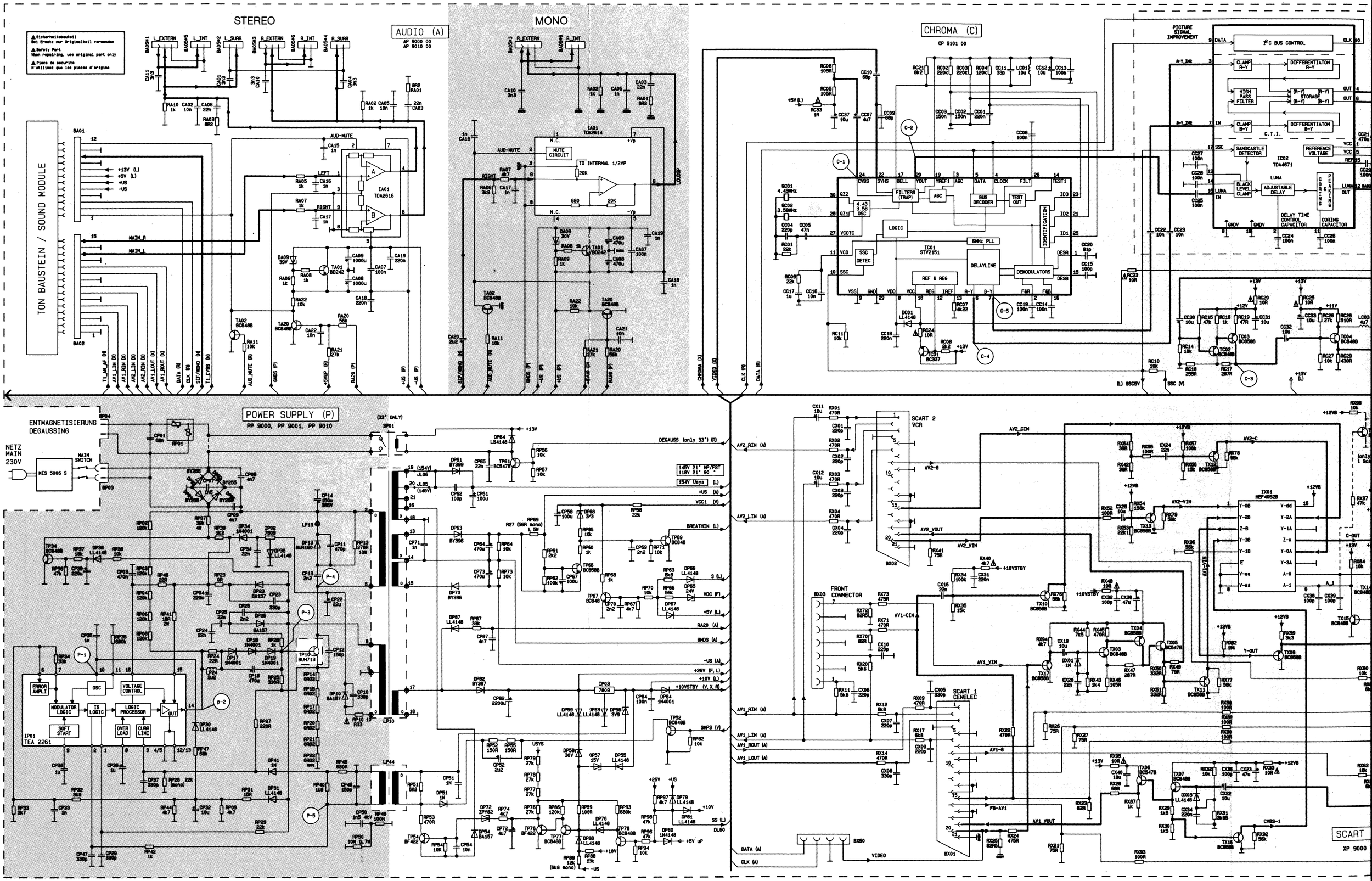

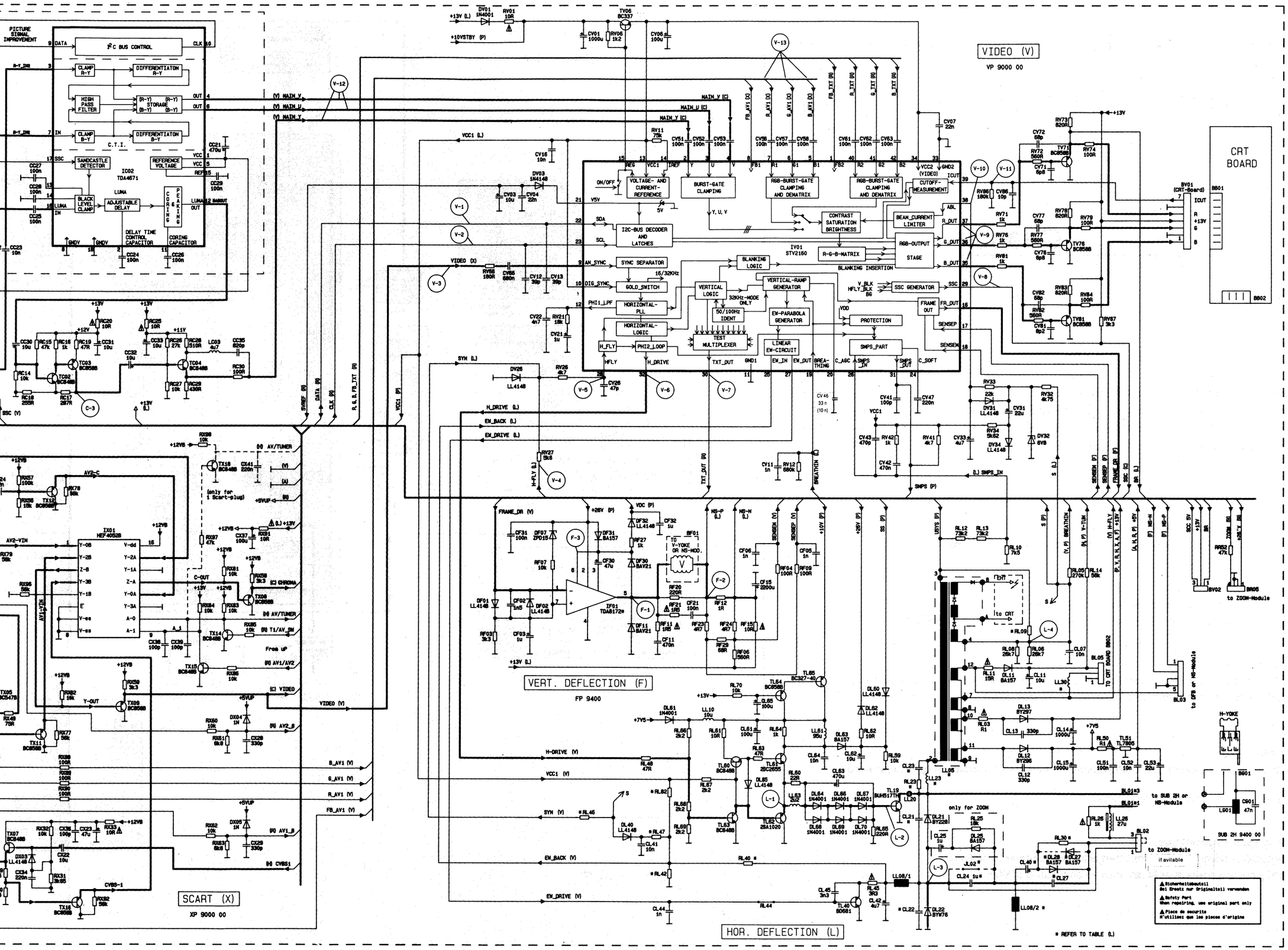
VIDEO (V)
VP 9000 00
SCART (X)
XP 9000 00
VERT. DEFLECTION (F)
FP 9400
HOR. DEFLECTION (L)
CRT BOARD
PICTURE SIGNAL IMPROVEMENT
I²C BUS CONTROL
CLAMP R-Y
DIFFERENTIATON R-Y
HIGH PASS FILTER
(R-Y) (B-Y) STORAGE (R-Y) (B-Y)
CLAMP B-Y
DIFFERENTIATON B-Y
C.T.I.
SANDCASTLE DETECTOR
REFERENCE VOLTAGE
IC02 TDA4671
BLACK LEVEL CLAMP
ADJUSTABLE DELAY
CORING
PEAKING
DELAY TIME CONTROL CAPACITOR
CORING CAPACITOR
VOLTAGE- AND CURRENT-REFERENCE
BURST-GATE CLAMPING
RGB-BURST-GATE CLAMPING AND DEMATRIX
CUTOFF-MEASUREMENT
CONTRAST SATURATION BRIGHTNESS
BEAM_CURRENT LIMITER
I2C-BUS DECODER AND LATCHES
IV01 STV2160
R-G-B-MATRIX
RGB-OUTPUT STAGE
SYNC SEPARATOR
BLANKING LOGIC
BLANKING INSERTION
GOLD_SWITCH
HORIZONTAL-PLL
VERTICAL LOGIC
VERTICAL-RAMP GENERATOR
SSC GENERATOR
FRAME OUT
50/100Hz IDENT
EW-PARABOLA GENERATOR
PROTECTION
HORIZONTAL-LOGIC
PHI2_LOOP
TEST MULTIPLEXER
LINEAR EW-CIRCUIT
SMPS_PART
IF01 TDA8172#
TO Y-YOKE OR NS-MOD.
TO CRT
TO CRT BOARD BH02
to DFB or NS-Module
to ZOOM-Module
to SUB 2H or NS-Module
SUB 2H 9400 00
H-YOKE
only for ZOOM
if avilable
AV/TUNER
(only for 1 Scart-plug)
IX01 HEF4052B
From uP
VIDEO (V)
B_AV1 (V)
G_AV1 (V)
R_AV1 (V)
FB_AV1 (V)
H-DRIVE (V)
EW_BACK (V)
EW_DRIVE (V)
H-DRIVE (L)
EW_BACK (L)
EW_DRIVE (L)
SYN (V)
SYN (L)
VCC1 (V)
VCC1 (L)
VCC1 (P)
SMPS (P)
(L) SMPS_IN
FRAME_DR (V)
VDC (P)
+26V (P)
+10V (P)
+13V (L)
+7V5
+12V
+11V
+5VUP
+10VSTBY (P)
+13V (P)
+13V
ON/OFF
V5V
5V
SDA
SCL
AN_SYNC
DIG_SYNC
PHI1_LPF
16/32KHz
32KHz-MODE ONLY
H_FLY
HFLY
H_DRIVE
TXT_OUT
GND1
EW_IN
EW_OUT
BREATHIN
C_ASC
SMPS_IN
SMPS_OUT
C_SOFT
V_BLK
HFLY_BLK
B6
VDD
FR_OUT
SENSEP
SENSEM
R_OUT
G_OUT
B_OUT
ICUT
ABL
NS-P (L)
NS-N (L)
SENSEM (V)
SENSEP (V)
USYS (P)
S (P)
(V, P) BREATHIN
(R, P) V-TUN
(V) H-FLY
(P, Y, R, H, S, A, F) +13V
(A, H, R, P) +8V
(F) NS-H
(F) NS-P
SCC 5V
+13V
BR
ZOOM (B)
+26V (V)
BV01 (CRT-Board)
BB01
BB02
BV02
BR05
BG01
CS01
LS01
BL03
BL01#3
BL01#1
BL02
LL08/1
LL08/2 #
* REFER TO TABLE (L)
Sicherheitsbauteil
Bei Ersatz nur Originalteil verwenden
Safety Part
When repairing, use original part only
Pièce de sécurité
N'utilisez que les pièces d'origine

Chassis-Grundplatte · Chassis base board · Plaque de base du chassis · Piastra base telaio · Chasis placa base

Lötseite · solder side · côté soudure · lato saldature · lado soldaduras

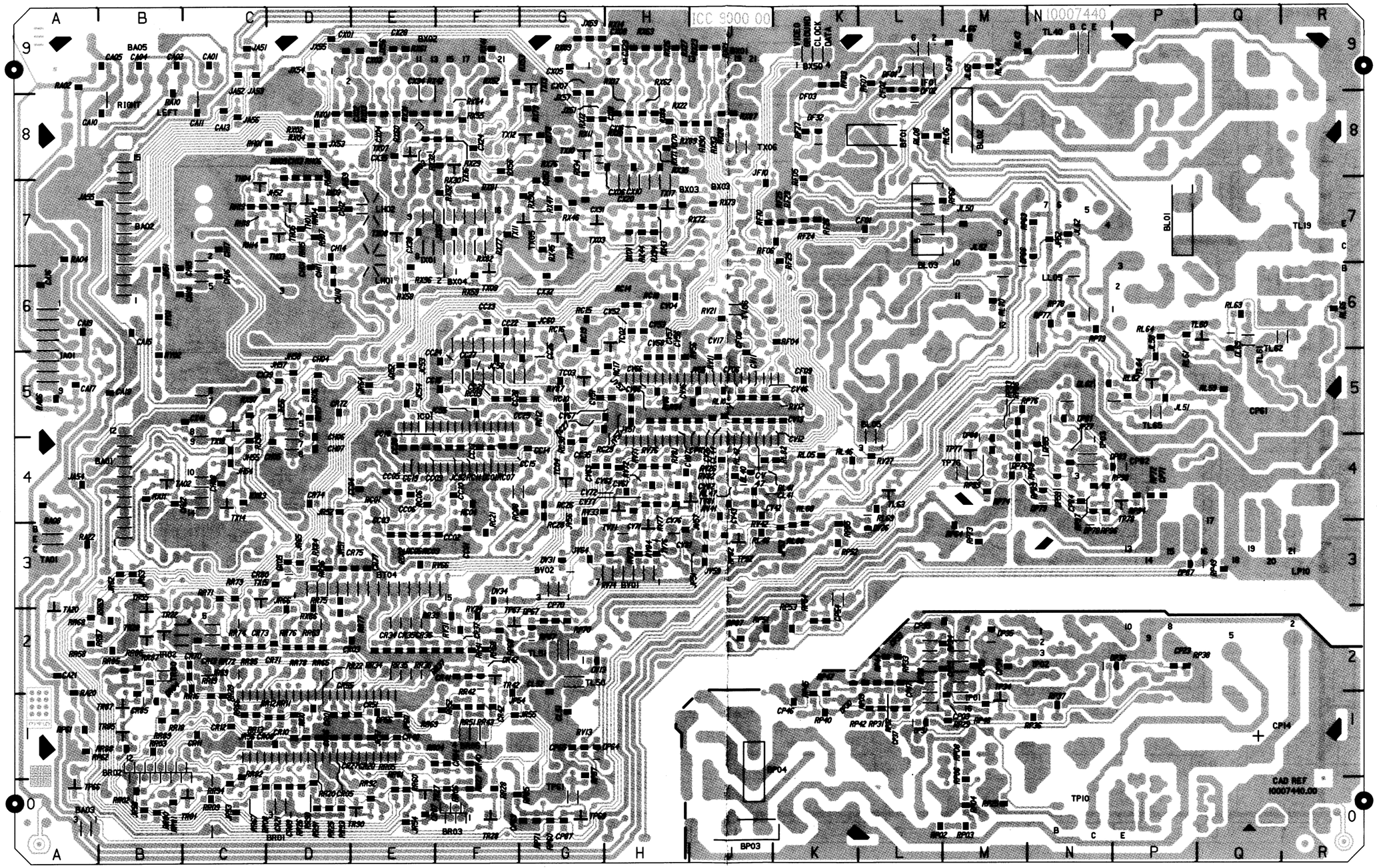

SUB 2H 9400

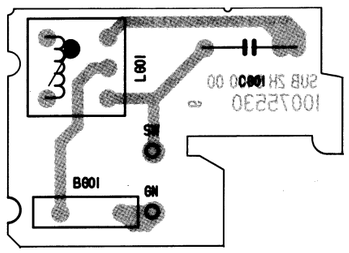

Chassis-Grundplatte · Chassis base board · Plaque de base du chassis · Piastra base telaio · Chasis placa base

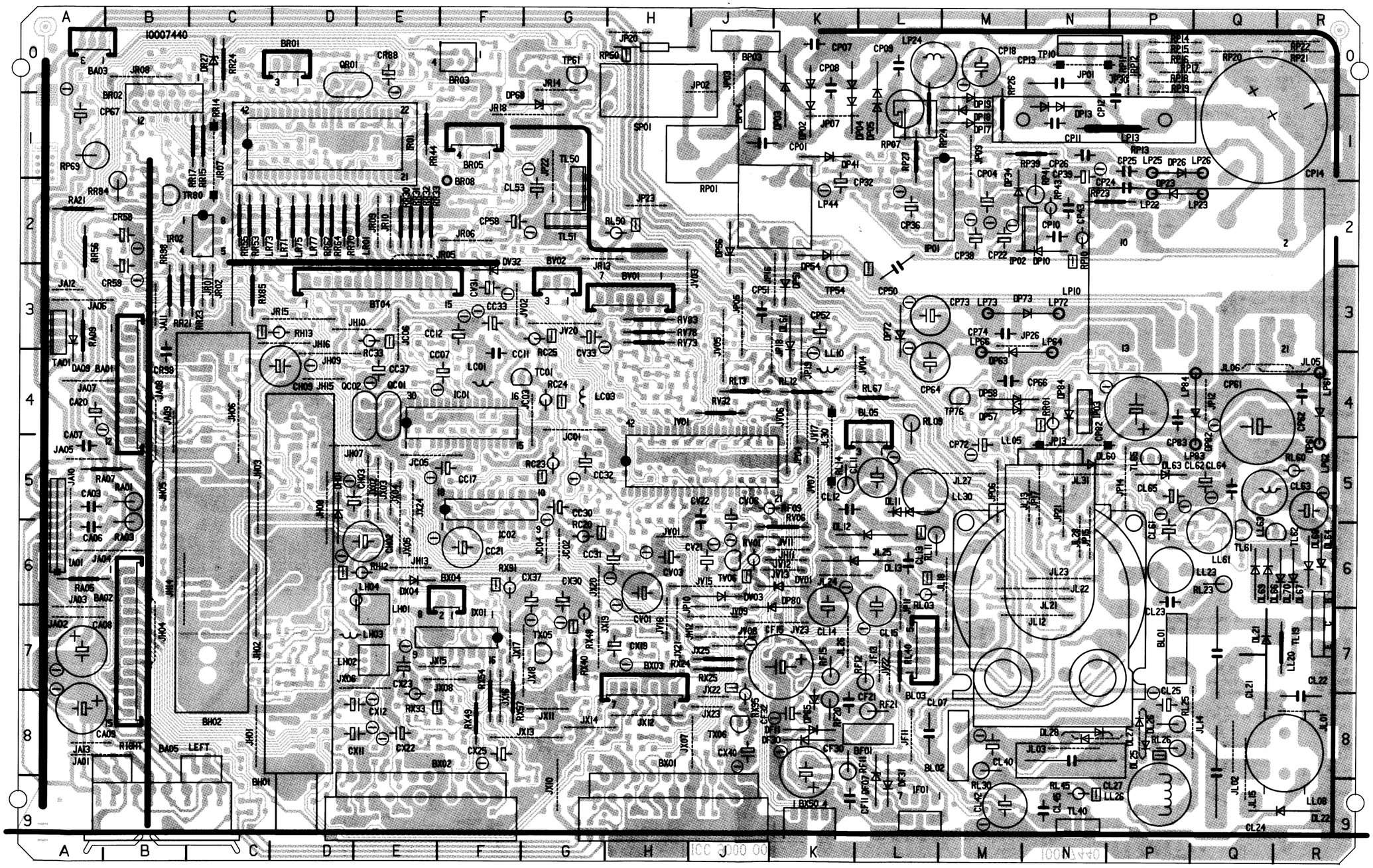

Das Chassis ist netzgetrennt. Die Trennstelle liegt im Netzteil. Um die VDE-Sicherheit zu gewährleisten, ist nach einer Reparatur sicherzustellen:

1. Auf Luft- und Kriechstrecken achten! Z. B. durchstehende Drähte ausgewechselter Bauelemente kurz abschneiden.
2. Sicherheitsbauteile ⚠ nur gegen Original-Ersatzteile auswechseln (siehe Stromlaufplan).

The chassis is isolated from line voltage. The isolation point is in the line section. In order to insure safety as per VDE requirements, the following must be checked after any repairs:

1. Check for air gap and leakage paths! For example, protruding ends of wires passing through the board must be cut off short.
2. Components with an essential safety function ⚠ are to be replaced only with original-equipment parts (see circuit diagram).

Le chassis est séparé du réseau. La séparation est située dans la partie alimentation. Pour assurer la sécurité au regard des normes VDE, après une réparation, il convient de veiller à

1. Prévenir des formations de circuits aériens ou rampants. Par ex. couper court les fils qui dépassent ou les éléments de construction échangés.
2. N'échanger les éléments de sécurité ⚠ que contre des pièces de rechange d'origine (cf. plan de passage du courant).

Il telaio é separato rete. Il punto di separazione risieda tra sezione rete. Per garantire la sicurezza VDE a riparazione effettuata deve essere assicurato che:

1. Tenere conto delle distanze dei componenti e dei percosi! p.e. i terminali in passaggio dei componenti sostituiti devono essere tagliati corti.
2. Componenti di sicurezza ⚠ devono essere sostituiti solamente con ricambi originali (vedere schema).

El chasis está aislado de la red. La separación se produce en la fuente de alimentación. Para garantizar la seguridad en cumplimiento de las normas VDE, después de una reparación, asegurarse de lo siguiente.

1. Mantener la distancia entre componentes. Por ejemplo, cortando todo lo posible los hilos y terminales que sobresalgan de las pistas del circuito impreso.
2. Los componentes marcados en el esquema con el símbolo ⚠ deben ser substituidos por repuestos originales (ver esquema).

Farbbalkentestbild 75% weiß, Color bar test pattern 75% white

C-1

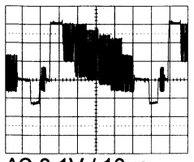

AC 0.1V / 10µs

C-2

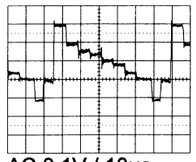

AC 0.1V / 10µs

C-3

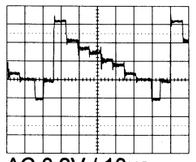

AC 0.2V / 10µs

C-4

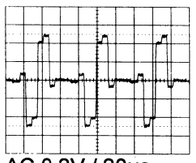

AC 0.2V / 20µs

C-5

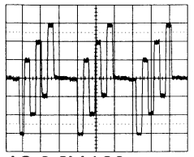

AC 0.2V / 20µs

F-1

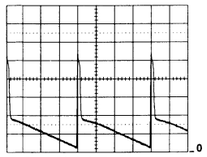

DC 10V / 5ms

F-2

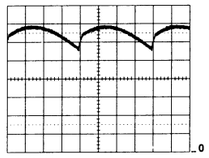

DC 2V / 5ms

F-3

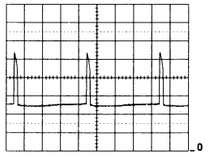

DC 10V / 5ms

H-1

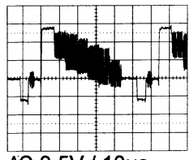

AC 0.5V / 10µs

L-1

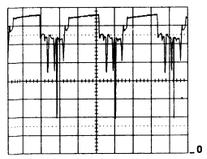

DC 2V / 20µs

L-2

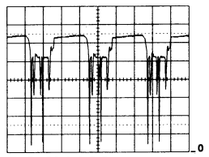

DC 2V / 20µs

L-3

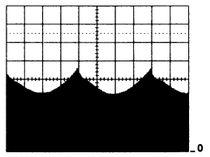

DC 50V / 5ms

L-4

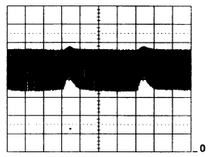

DC 5V / 5ms

P-1 - B

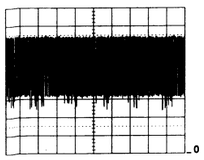

DC 0.5V / 5ms

P-1 - V

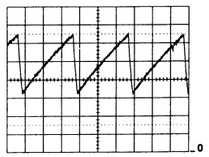

DC 0.5V / 5µs

P-2 - B

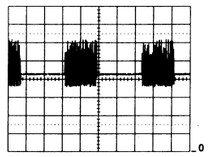

DC 2V / 2ms

P-2 - V

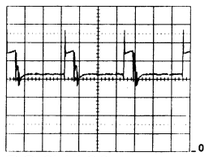

DC 2V / 20µs

P-3 - B

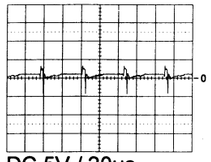

DC 5V / 20µs

P-3 - V

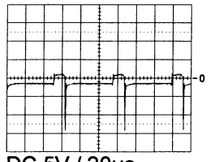

DC 5V / 20µs

P-4 - B

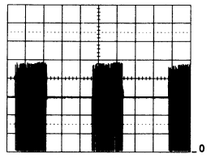

DC 100V / 2ms

P-4 - V

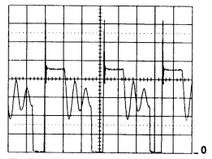

DC 100V / 20µs

P-5 - B

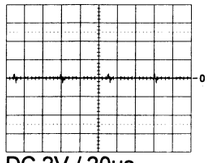

DC 2V / 20µs

P-5 - V

DC 2V / 20µs

B = Burstbetrieb, Stand by mode,
V = Vollbetrieb, On mode

V-1

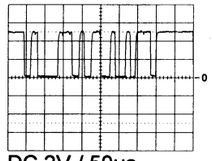

DC 2V / 50µs

V-2

DC 2V / 50µs

V-3

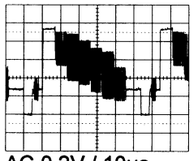

AC 0.2V / 10µs

V-4

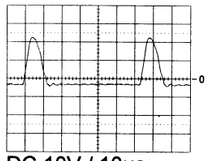

DC 10V / 10µs

V-5

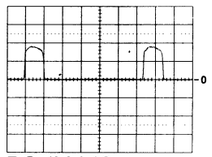

DC 1V / 10µs

V-6

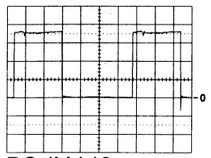

DC 1V / 10µs

V-7

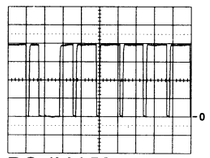

DC 1V / 50µs

V-8

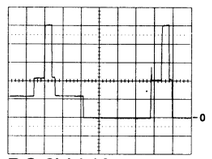

DC 2V / 10µs

V-9

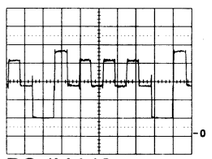

DC 1V / 10µs

V-10

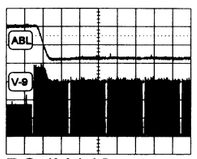

DC 1V / 10ms

V-11

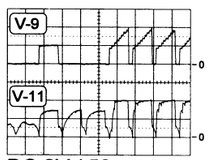

DC 2V / 50µs

V-12

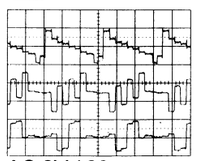

AC 2V / 20µs

V-13

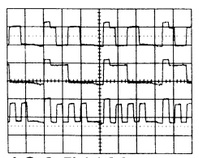

AC 0.5V / 20µs

Bildröhrenplatte · Picture tube board · Platine tube image · Basetta Ciescopio · Placa de tubo de imagen

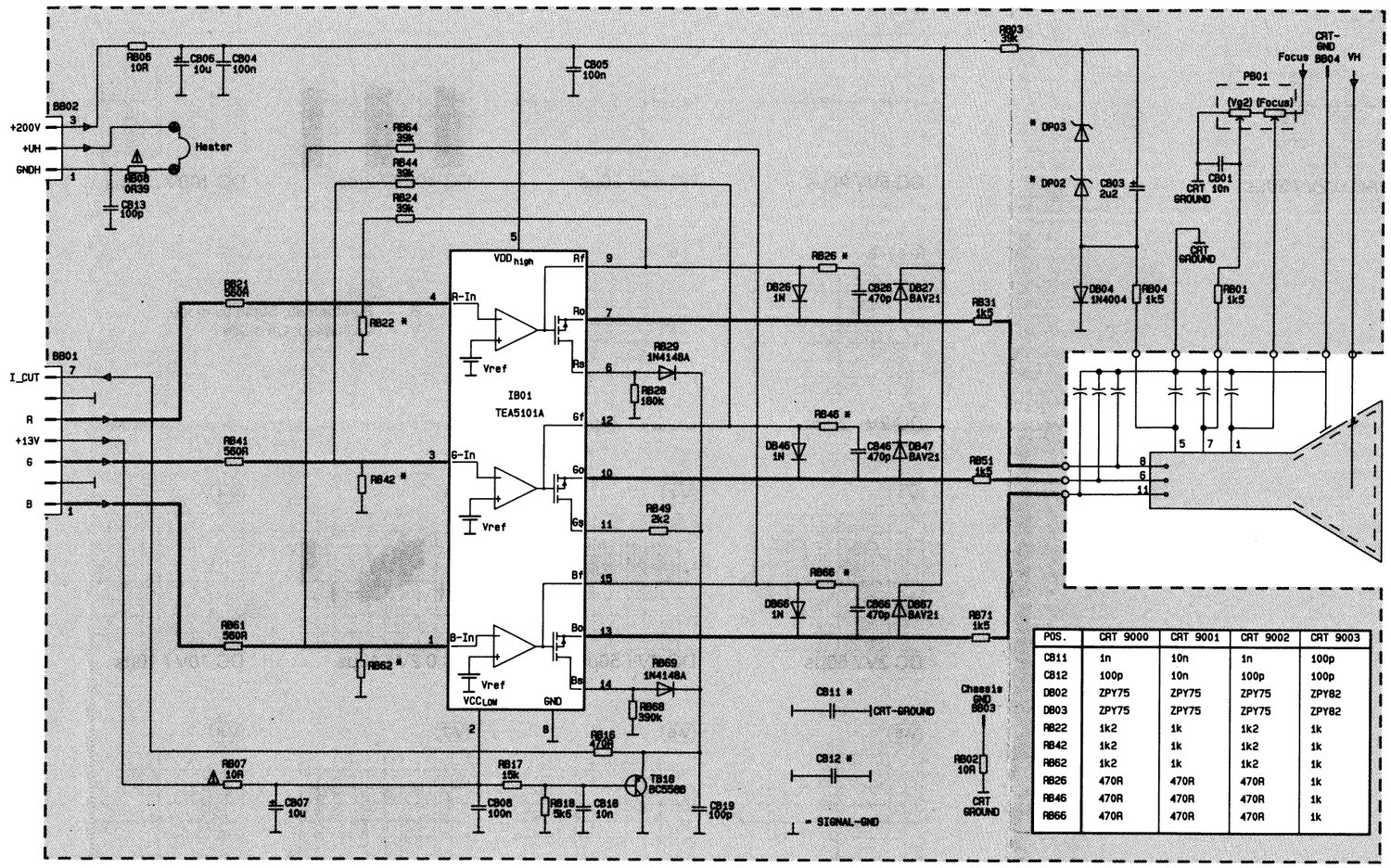

POS.	CRT 9000	CRT 9001	CRT 9002	CRT 9003
CB11	1n	10n	1n	100p
CB12	100p	10n	100p	100p
DB02	ZPY75	ZPY75	ZPY75	ZPY82
DB03	ZPY75	ZPY75	ZPY75	ZPY82
RB22	1k2	1k	1k2	1k
RB42	1k2	1k	1k2	1k
RB62	1k2	1k	1k2	1k
RB26	470R	470R	470R	1k
RB46	470R	470R	470R	1k
RB66	470R	470R	470R	1k

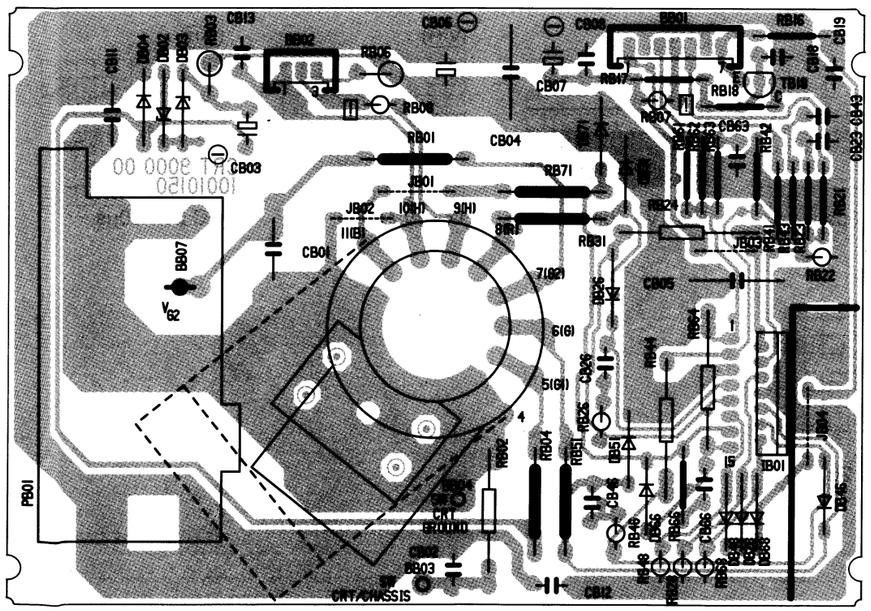

Lötseite · solder side · côté soudure · lato saldature · lado soldaduras

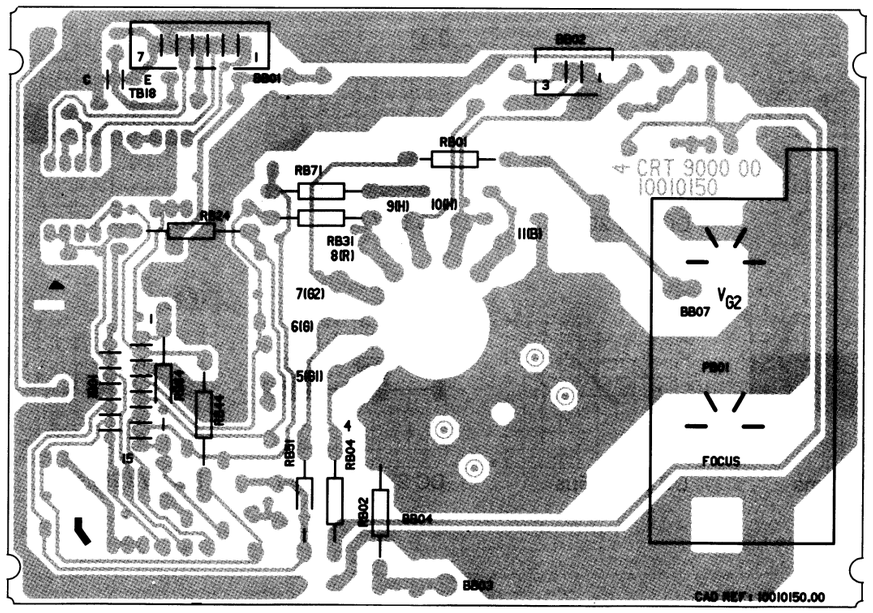

DVT 9000 Videotext-Decoder · Teletext Decoder · Décodeur Vidéotexte · Decoder Televideo · Descodificador Teletexto

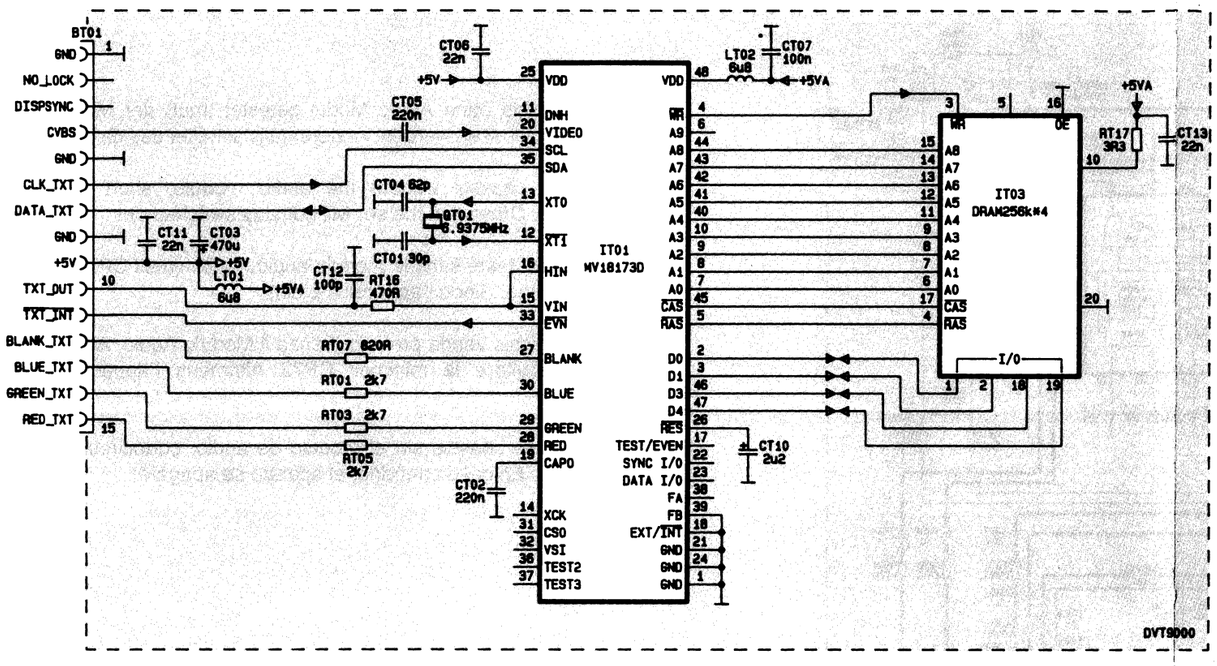

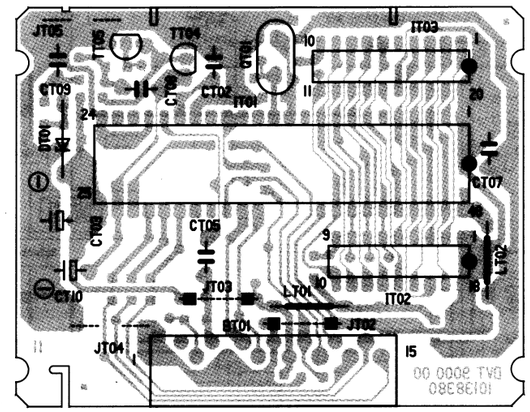

DVT 9001 Videotext-Decoder · Teletext Decoder · Décodeur Vidéotexte · Decoder Televideo · Descodificador Teletexto

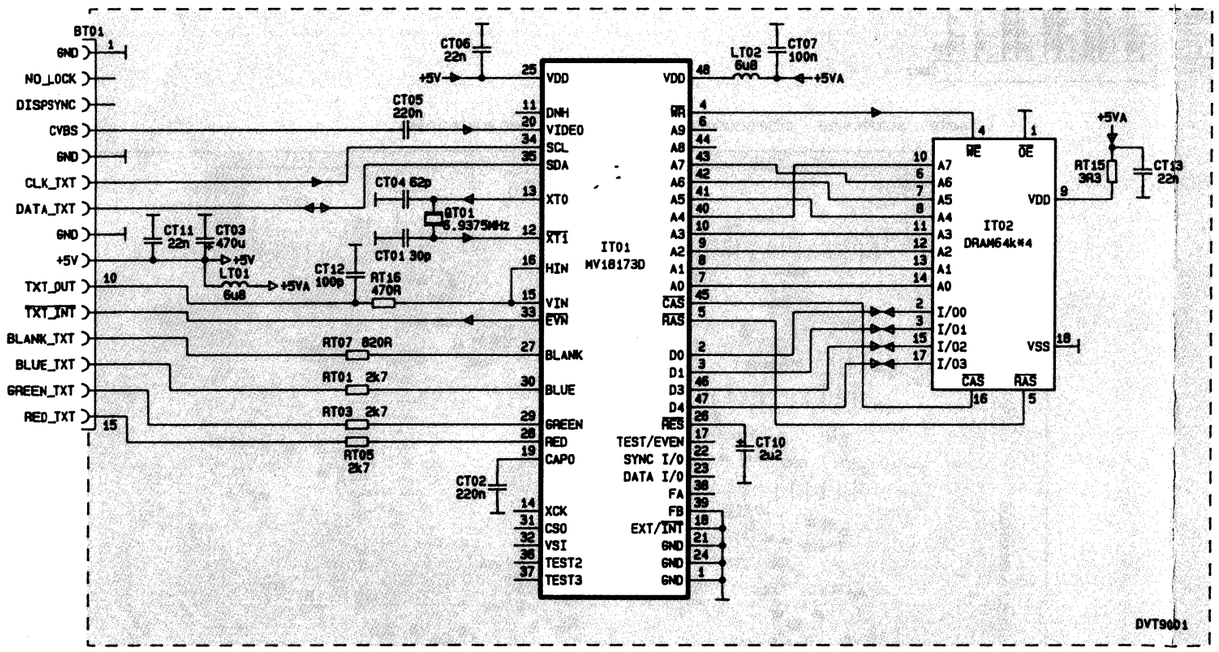

Lötseite · solder side · côté soudure · lato saldature · lado soldaduras

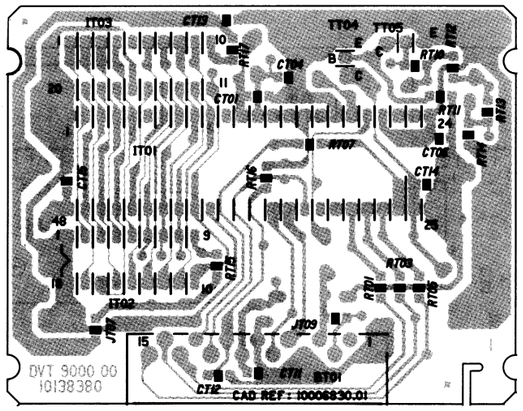

AM/FM 9015/9215/9315/9415/9515/9615 Ton-Signal-Baustein · Audio Signal Module · Module Son Signal · Modulo Audio Segnale · Modulo Señal Audio

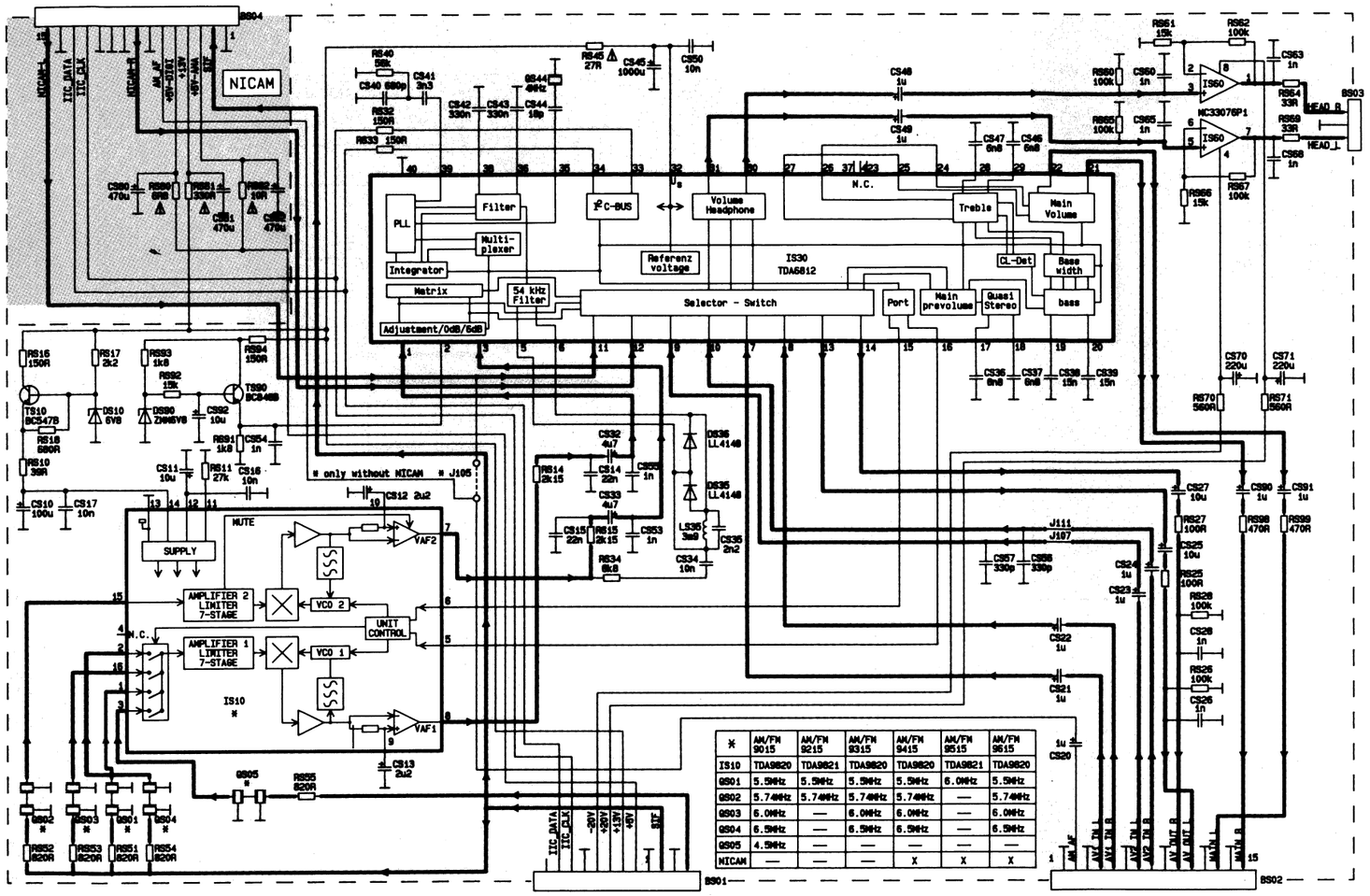

*	AM/FM 9015	AM/FM 9215	AM/FM 9315	AM/FM 9415	AM/FM 9515	AM/FM 9615
IS10	TDA9820	TDA9821	TDA9820	TDA9820	TDA9821	TDA9820
QS01	5.5MHz	5.5MHz	5.5MHz	5.5MHz	6.0MHz	5.5MHz
QS02	5.74MHz	5.74MHz	5.74MHz	5.74MHz	—	5.74MHz
QS03	6.0MHz	—	6.0MHz	6.0MHz	—	6.0MHz
QS04	6.5MHz	—	6.5MHz	6.5MHz	—	6.5MHz
QS05	4.5MHz	—	—	—	—	—
NICAM	—	—	—	X	X	X

Wird das Chassis ohne Audio Modul getestet, muß der Minimelf CP72 kurzgeschlossen werden. Anderenfalls schaltet das Gerät ab!

If testing the chassis without the audio module, short circuit minimelf CP72. Otherwise the set will not stay switched on!

Si le châssis est testé sans le module audio, la Minimelf CP72 doit être courtcircuitée. Sinon l´appareil s´éteint!

Qualora lo Chassis venga provato, Senza il Modulo Audio, Allora si deve Cortocircuitare la minimelf CP72 Altrimenti l´apparato si spegne!

Si be verefica el chassis sin el modulo de audio, cortocircuitar la minimelf CP72. En caso contrario, el aparato se apagará!

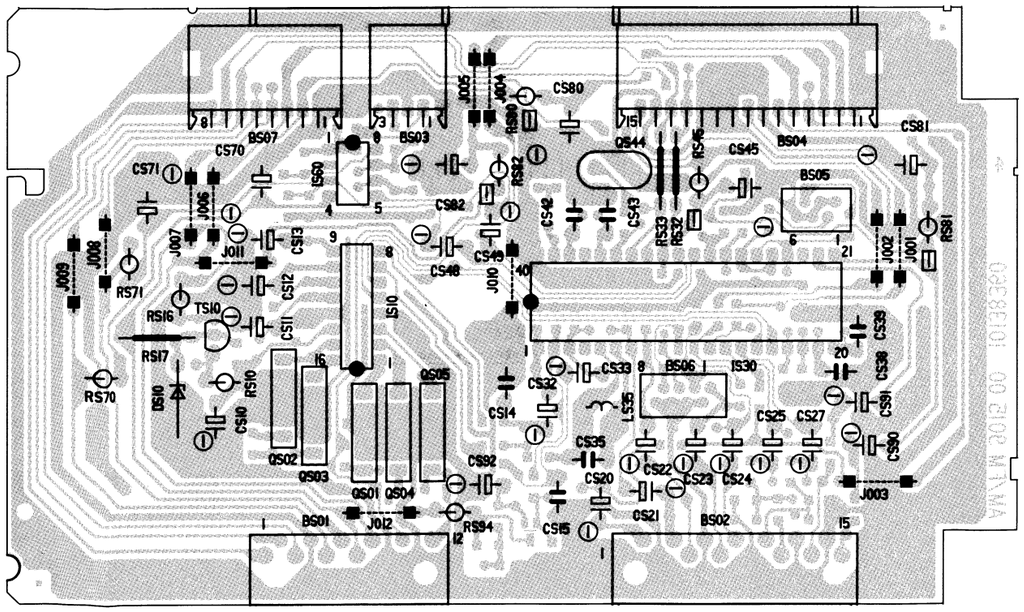

Lötseite · solder side · côté soudure · lato saldature · lado soldaduras

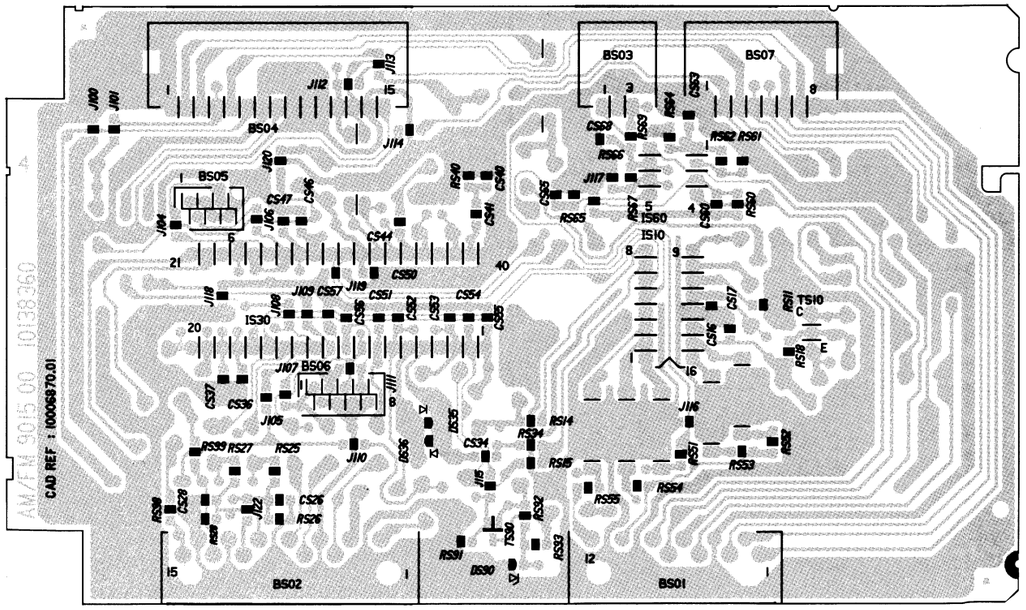

SUB NI 9000/9001 – NICAM

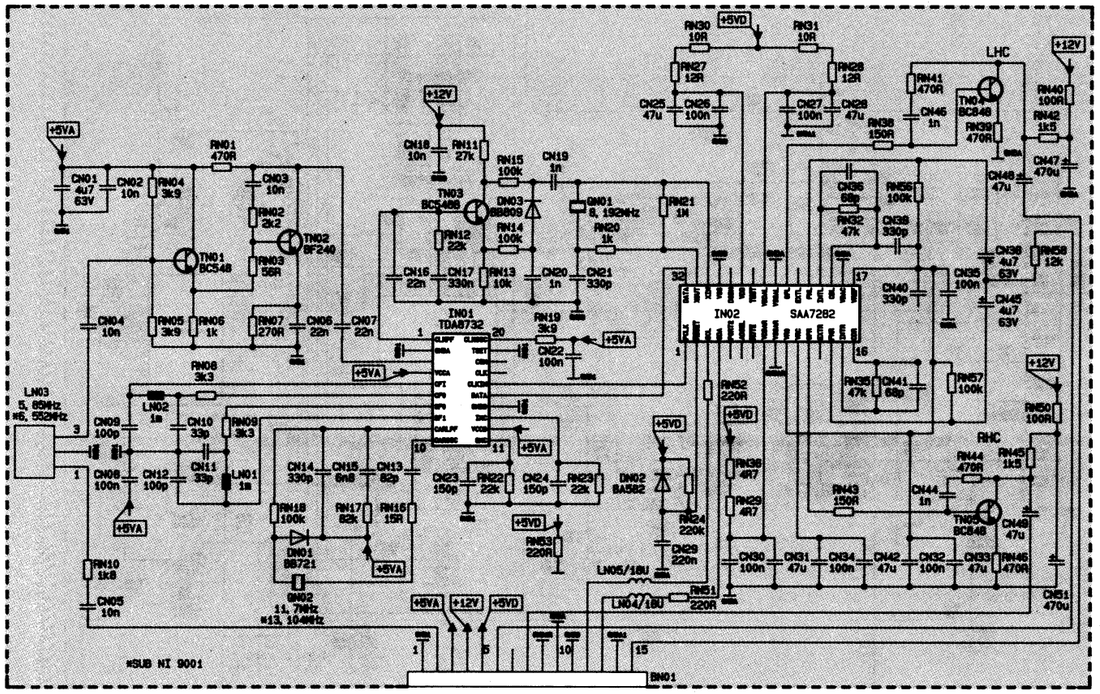

NS 9000/9001 Nord-Süd-Modul · North South Module · Module Nord Sud · Modulo Nord Sud

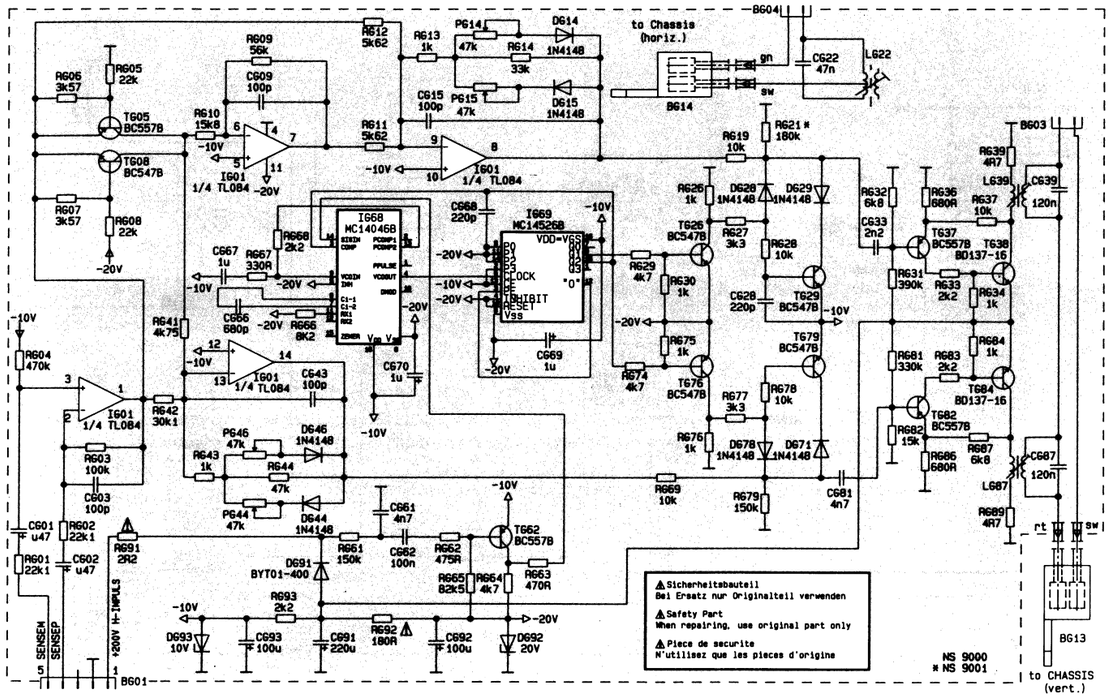

Lötseite · solder side · côté soudure
Lato saldature · lado soldaduras

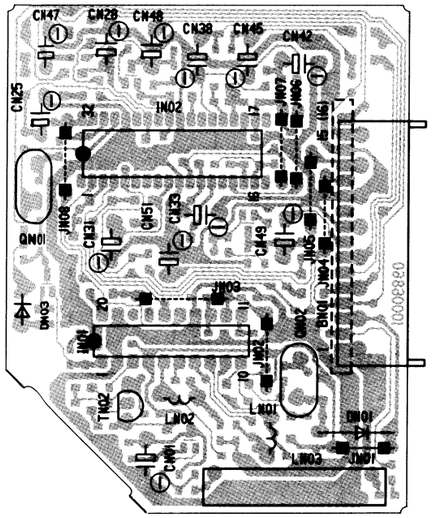

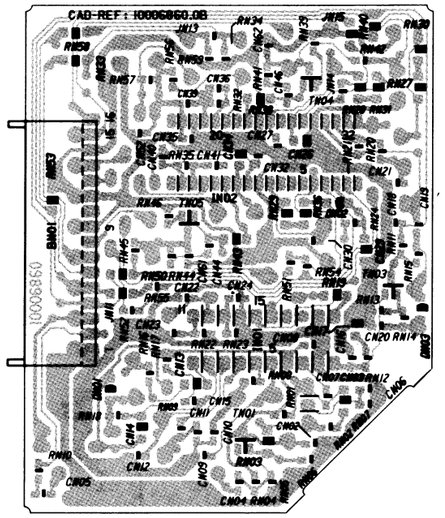

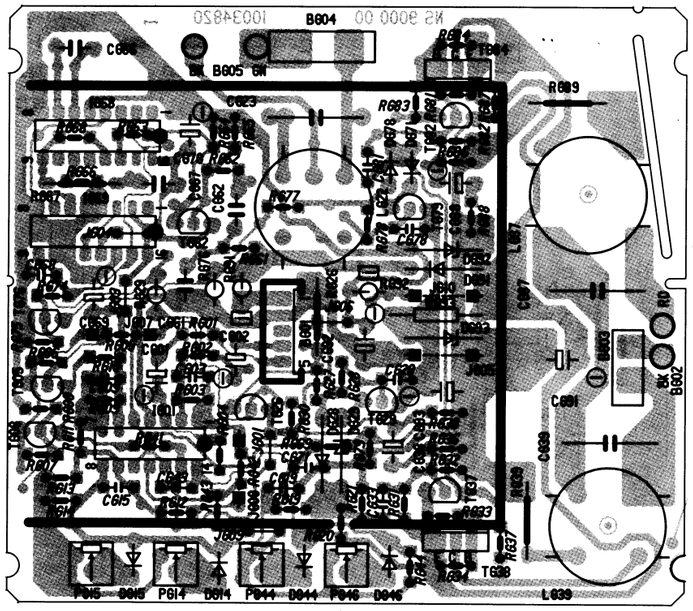

Zoom 9680/9690

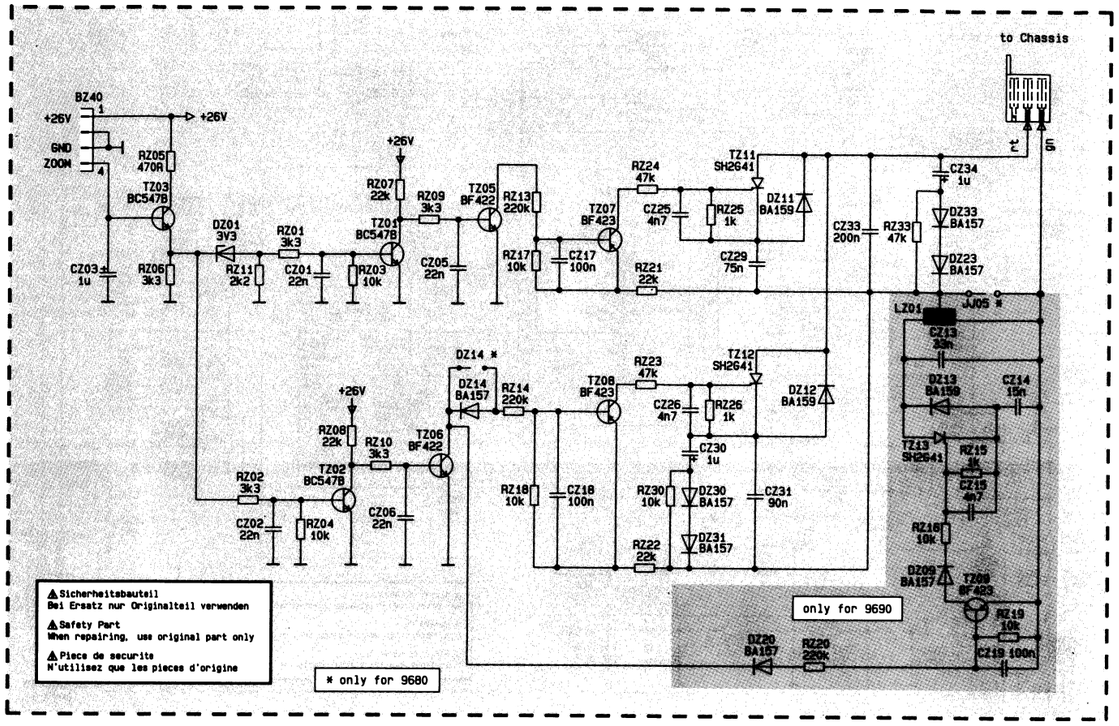

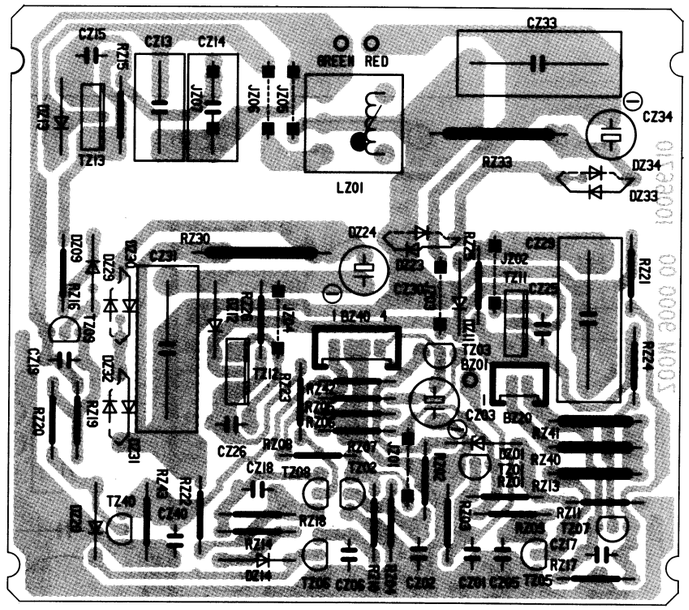

Tuner MTP 4015

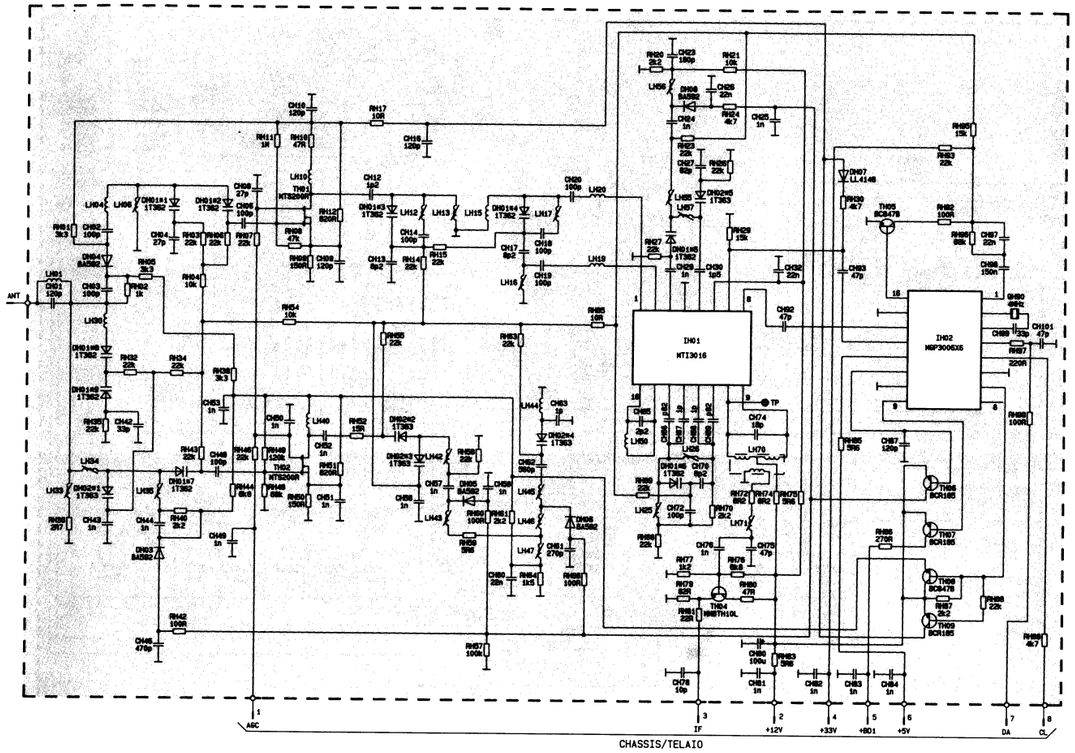

ZF-Verstärker 2239 · IF Amplifier · Amplificateur FI · Amplificatore FI · Amplificador FI

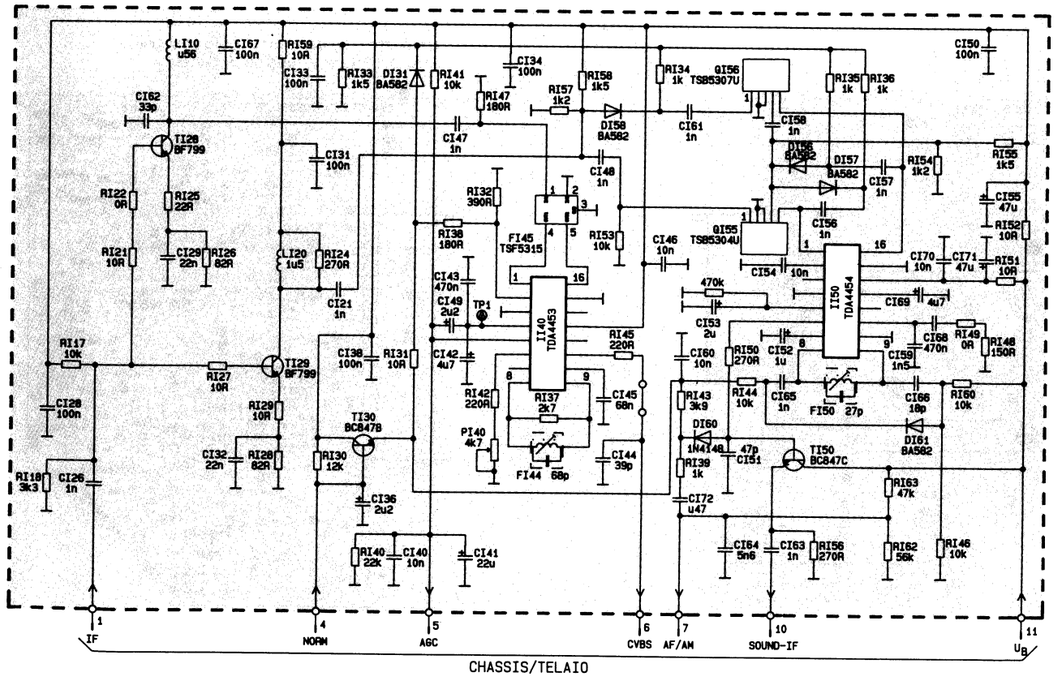

ZF-Verstärker 2248/2250 · IF Amplifier · Amplificateur FI · Amplificatore FI · Amplificador FI

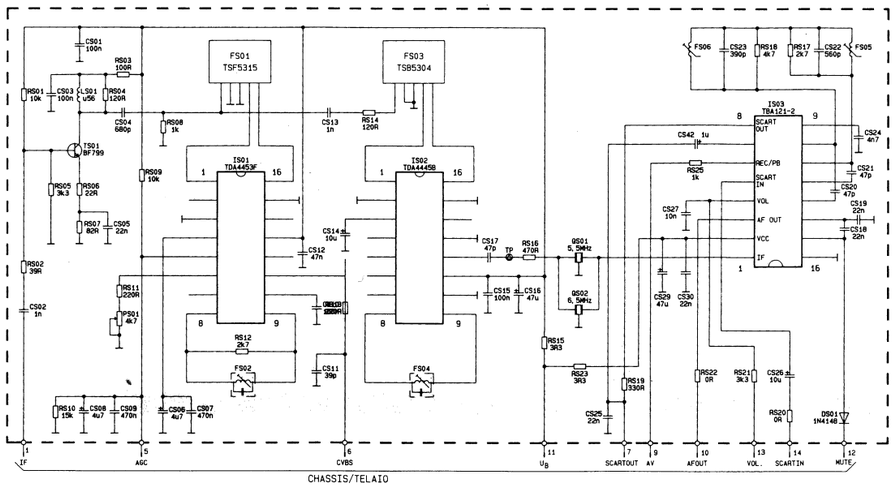

ZF-Verstärker 2332 · IF Amplifier · Amplificateur FI · Amplificatore FI · Amplificador FI

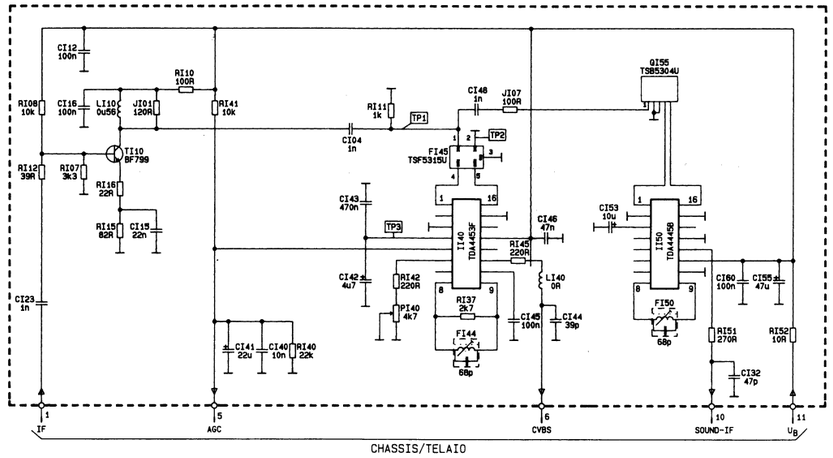

ZF-Verstärker 2339 · IF Amplifier · Amplificateur FI · Amplificatore FI · Amplificador FI

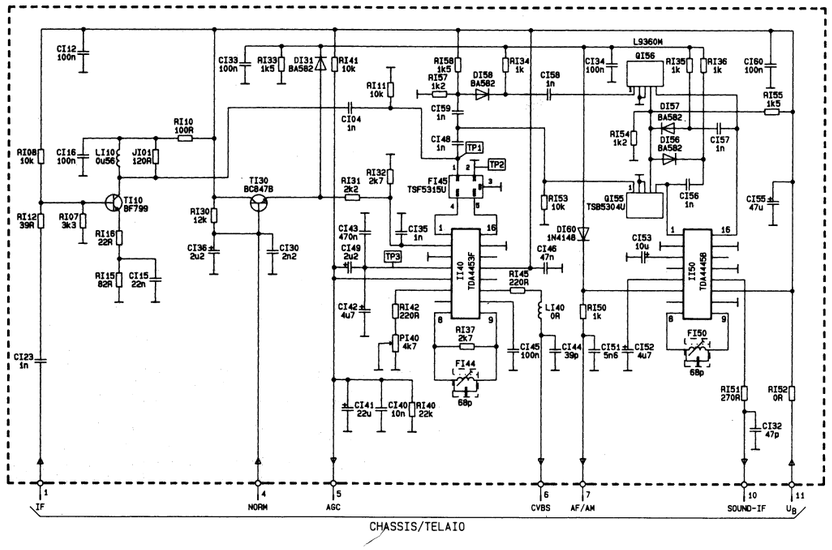

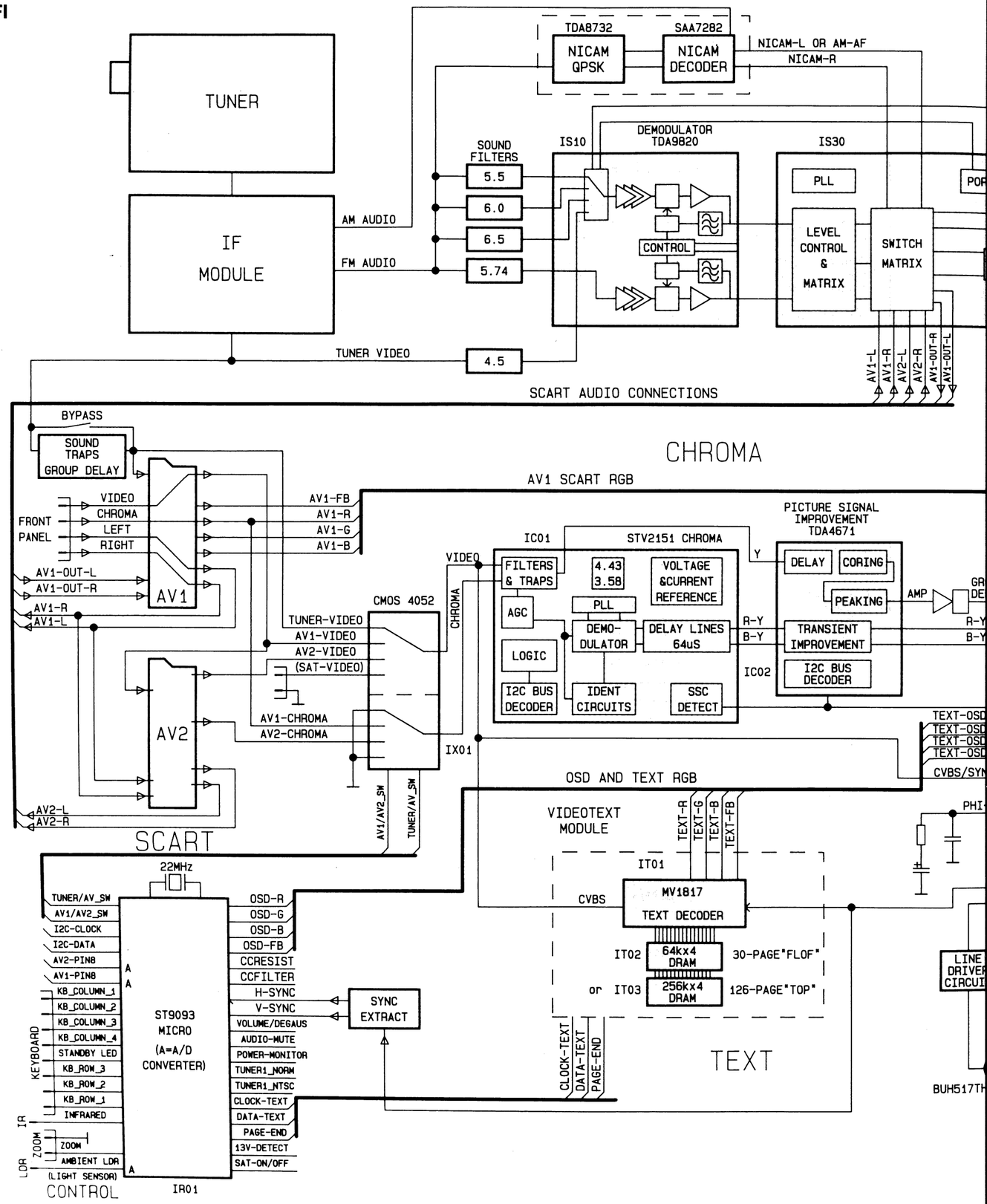

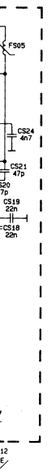

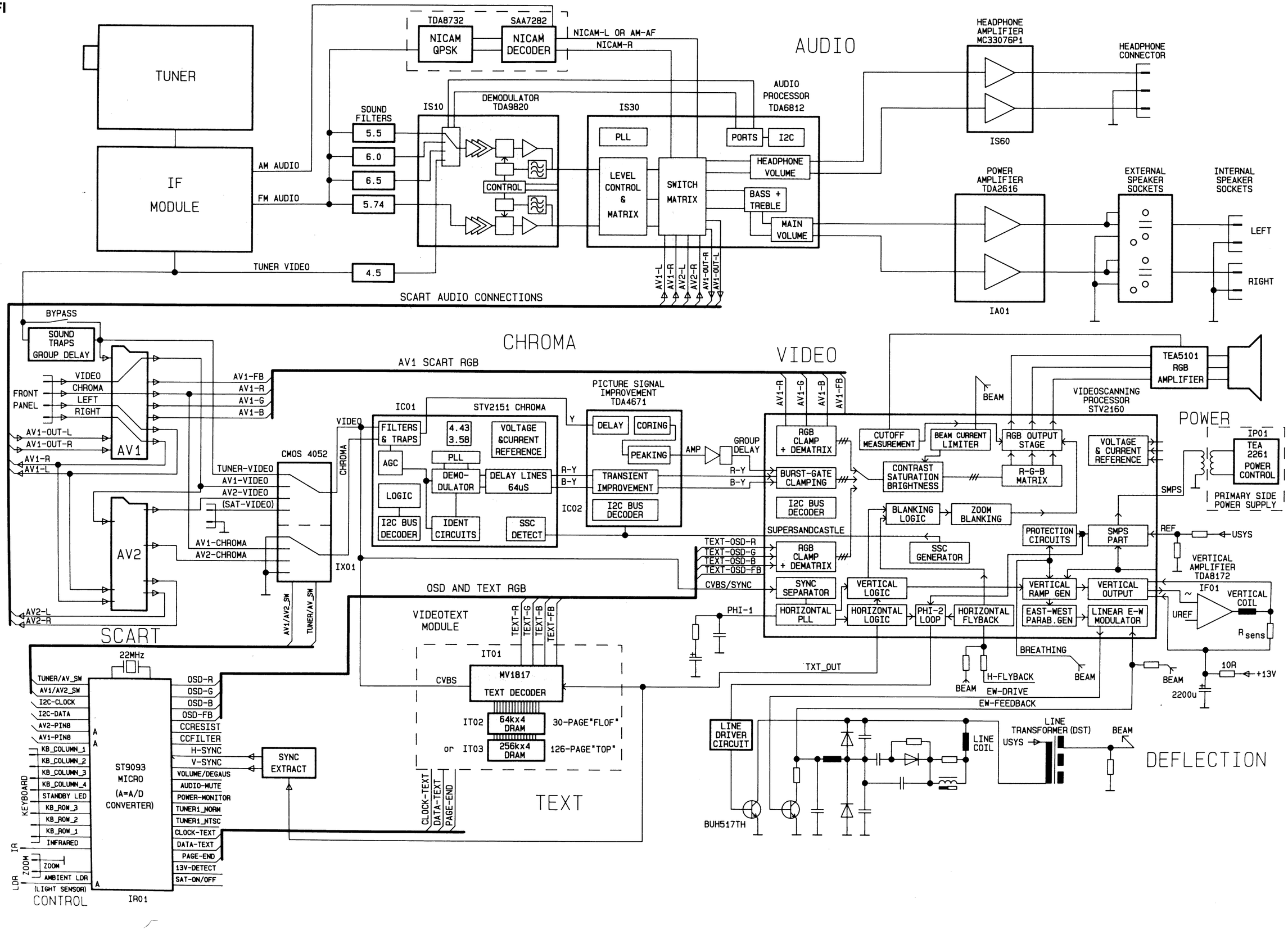
AUDIO
TUNER
IF MODULE
AM AUDIO
FM AUDIO
TUNER VIDEO
TDA8732
NICAM QPSK
SAA7282
NICAM DECODER
NICAM-L OR AM-AF
NICAM-R
SOUND FILTERS
5.5
6.0
6.5
5.74
4.5
IS10
DEMODULATOR TDA9820
CONTROL
IS30
PLL
LEVEL CONTROL & MATRIX
SWITCH MATRIX
AUDIO PROCESSOR TDA6812
PORTS
I2C
HEADPHONE VOLUME
BASS + TREBLE
MAIN VOLUME
HEADPHONE AMPLIFIER MC33076P1
IS60
HEADPHONE CONNECTOR
POWER AMPLIFIER TDA2616
IA01
EXTERNAL SPEAKER SOCKETS
INTERNAL SPEAKER SOCKETS
LEFT
RIGHT
AV1-L
AV1-R
AV2-L
AV2-R
AV1-OUT-R
AV1-OUT-L
SCART AUDIO CONNECTIONS
CHROMA
BYPASS
SOUND TRAPS GROUP DELAY
VIDEO
CHROMA
LEFT
RIGHT
FRONT PANEL
AV1-OUT-L
AV1-OUT-R
AV1-R
AV1-L
AV1
AV2
AV2-L
AV2-R
SCART
AV1 SCART RGB
AV1-FB
AV1-R
AV1-G
AV1-B
CMOS 4052
TUNER-VIDEO
AV1-VIDEO
AV2-VIDEO
(SAT-VIDEO)
AV1-CHROMA
AV2-CHROMA
IX01
AV1/AV2_SW
TUNER/AV_SW
IC01
STV2151 CHROMA
FILTERS & TRAPS
4.43
3.58
VOLTAGE &CURRENT REFERENCE
AGC
PLL
DEMO-DULATOR
DELAY LINES 64uS
LOGIC
I2C BUS DECODER
IDENT CIRCUITS
SSC DETECT
IC02
PICTURE SIGNAL IMPROVEMENT TDA4671
DELAY
CORING
PEAKING
TRANSIENT IMPROVEMENT
I2C BUS DECODER
AMP
GROUP DELAY
R-Y
B-Y
Y
VIDEO
AV1-R
AV1-G
AV1-B
AV1-FB
RGB CLAMP + DEMATRIX
BURST-GATE CLAMPING
I2C BUS DECODER
SUPERSANDCASTLE
TEXT-OSD-R
TEXT-OSD-G
TEXT-OSD-B
TEXT-OSD-FB
CVBS/SYNC
SYNC SEPARATOR
HORIZONTAL PLL
VERTICAL LOGIC
HORIZONTAL LOGIC
PHI-1
PHI-2 LOOP
HORIZONTAL FLYBACK
CUTOFF MEASUREMENT
BEAM CURRENT LIMITER
CONTRAST SATURATION BRIGHTNESS
BLANKING LOGIC
ZOOM BLANKING
SSC GENERATOR
RGB OUTPUT STAGE
R-G-B MATRIX
BEAM
VIDEOSCANNING PROCESSOR STV2160
TEA5101 RGB AMPLIFIER
POWER
IP01
TEA 2261 POWER CONTROL
SMPS
PRIMARY SIDE POWER SUPPLY
PROTECTION CIRCUITS
SMPS PART
REF
USYS
VERTICAL AMPLIFIER TDA8172
IF01
VERTICAL RAMP GEN
VERTICAL OUTPUT
VERTICAL COIL
UREF
R sens
EAST-WEST PARAB.GEN
LINEAR E-W MODULATOR
BREATHING
H-FLYBACK
EW-DRIVE
EW-FEEDBACK
10R
+13V
2200u
TXT_OUT
OSD AND TEXT RGB
VIDEOTEXT MODULE
TEXT-R
TEXT-G
TEXT-B
TEXT-FB
IT01
CVBS
MV1817 TEXT DECODER
IT02
64kx4 DRAM
30-PAGE"FLOF"
or IT03
256kx4 DRAM
126-PAGE"TOP"
CLOCK-TEXT
DATA-TEXT
PAGE-END
TEXT
22MHz
TUNER/AV_SW
AV1/AV2_SW
I2C-CLOCK
I2C-DATA
AV2-PIN8
AV1-PIN8
KB_COLUMN_1
KB_COLUMN_2
KB_COLUMN_3
KB_COLUMN_4
STANDBY LED
KB_ROW_3
KB_ROW_2
KB_ROW_1
INFRARED
KEYBOARD
IR
ZOOM
AMBIENT LDR
(LIGHT SENSOR)
LDR
ST9093 MICRO (A=A/D CONVERTER)
IR01
CONTROL
OSD-R
OSD-G
OSD-B
OSD-FB
CCRESIST
CCFILTER
H-SYNC
V-SYNC
VOLUME/DEGAUS
AUDIO-MUTE
POWER-MONITOR
TUNER1_NORM
TUNER1_NTSC
CLOCK-TEXT
DATA-TEXT
PAGE-END
13V-DETECT
SAT-ON/OFF
SYNC EXTRACT
LINE DRIVER CIRCUIT
BUH517TH
LINE COIL
LINE TRANSFORMER (DST)
USYS
BEAM
DEFLECTION

Service-Mode Chassis ICC9

Der Service-Mode wird für den Geräteabgleich benötigt. Alle Einstellungen erfolgen mit der Fernbedienung (bis auf Systemspannung, Fokuseinstellungen und Schirmgitterspannungen).

1.Service-Mode einschalten

1.1 Mit der Fernbedienung das Fernsehgerät in Stand-by schalten.
1.2 Das Gerät mit dem Netzschalter ausschalten.
1.3 Die blaue Taste gedrückt halten und gleichzeitig das Gerät mit dem Netzschalter einschalten.
1.4 Das folgende Menü erscheint nach erneutem Drücken der blauen Taste

SET-UP	VIDEO	GEOM
xxx 123456789		Configuration

Achtung: Der Service-Mode läßt sich nicht einschalten, wenn an einer Euro-AV-Buchse ein Gerät aktiviert ist, d.h. die Schaltspannung anliegt.

2. Funktionswahl

Mit den Tasten +/- wird das entsprechende Menü gewählt, welches mit der blauen Taste "durchgeblättert wird".
Die Tasten 1-4 legen die Anzahl der sichtbaren Menüzeilen fest.

3. Umschalten zwischen Service- und TV-Betrieb

Im Service-Mode sind die normalen Fernsehfunktionen nicht bedienbar. Werden diese im Service-Mode benötigt (z.B. Programmwechsel), kann mit der Taste (**TV**) in den normalen TV-Betrieb geschaltet werden. Durch Drücken der blauen Taste gelangt man zurück zum Service Mode.

4. Abgleich der gewählten Funktion und Speichern

Der momentane Wert der gewählten Funktion wird hexadezimal rechts neben der abzugleichenden Position angegeben und kann mit der Taste + bzw. - auf der Fernbedienung verändert werden.
Die Änderungen des jeweiligen Menüs können unter STORE mit der +Taste gespeichert, bzw unter RESTORE und der +Taste rückgängig gemacht werden.
Im Menüpunkt ROM kann man die Software-Defaultwerte laden. Sie sind aber nur eine grobe Annäherung an den noch vorzunehmenden Abgleich und sollten nur im Notfall verwendet werden.

5. Service-Mode verlassen

Zum Verlassen des Service-Mode das Gerät in Stand By schalten oder mit dem Netzschalter ausschalten.

Software code and TV configuration:

T	TEXT MODULE (32 PAGE)
TT	TOP TEXT MODULE (128 PAGE)
N	NICAM MODULE
M	MONO SOUND IF
P	PSI (PICTURE SIGNAL IMPROVEMENT)
Z	ZOOM MODULE
K	TELEFUNKEN TV (DETECTED BY SPECIAL KEYBOARD)
7	SUBCODE 7 (THOMSON) IS ALSO DETECTED
I	INFRARED LOCK MODE

Service-Mode Chassis ICC9

The Service Mode is required for the alignment of the TV set. All adjustments are made by using the remote control (except for system voltage, focus adjustment and screen grid voltage).

1.Switching on Service Mode

1.1 Switch the TV set to stand-by using the remote control.
1.2 Switch the set off using the main switch.
1.3 Press the blue (VT) button, hold down and switch on the set with the main switch.
1.4 The following menu appears after repeatedly pressing the blue button.

SET-UP	VIDEO	GEOM
xxx 123456789		Configuration

Important: The service mode cannot be switched on if any equipment is activated at the scart socket, i.e. switching voltage is present.

2. Function Selection

The +/- button selects the menu containing the function to be aligned. Pressing the blue button selects the function to be aligned.
With buttons 1-4 you select the number of visible menu lines.

3. Switching between Service- and TV-mode

In Service Mode the normal TV function cannot be operated. If they are required in Service mode (e.g. program change) press the TV button to get into the normal TV mode. By pressing the blue button you return to the Service mode.

4. Alignment of the selected function and storing

The current value of the selected function is given in hexadecimal form on the right-hand side of the alignment position, and can be changed for alignment purposes using the + or - button on the remote control.
To recall the previous values select the function RESTORE and press the + button. To store the modified values of each menu, select the function STORE and press the + button.
In the function ROM you can load the software default values. They are not very exactly and should be used only in special cases.

5. Leave Service-Mode

To leave the Service-Mode switch the TV-set to stand by or switch off with the main switch.

Software code and TV configuration:

T	TEXT MODULE (32 PAGE)
TT	TOP TEXT MODULE (128 PAGE)
N	NICAM MODULE
M	MONO SOUND IF
P	PSI (PICTURE SIGNAL IMPROVEMENT)
Z	ZOOM MODULE
K	TELEFUNKEN TV (DETECTED BY SPECIAL KEYBOARD)
7	SUBCODE 7 (THOMSON) IS ALSO DETECTED
I	INFRARED LOCK MODE

Mode service Chassis ICC9

Le mode service sert au réglage de l'appareil. Toutes les opérations de réglage s'effectuent à l'aide de la télécommande (sauf la tension de système, les mises au point et les tensions de grille-écran).

1. Activation du mode service

1.1 Commutez le téléviseur en position de veille avec la télécommande
1.2 Mettez le téléviseur hors circuit par l'interrupteur secteur.
1.3 Tenez la touche bleue enfoncée et mettez simultanément le téléviseur en marche avec l'interrupteur secteur.
1.4 Le menu suivant apparaît après avoir appuyé à nouveau sur la touche bleue

SET-UP	VIDEO	GEOM
xxx 123456789		Configuration

Attention : le mode service ne peut pas être mis en marche lorsqu'un appareil est activé à la prise Euro-AV, c'est-à-dire que la tension de commande est appliquée.

2. Sélection de la fonction

Par les touches +/- vous pouvez choisir le menu correspondant et le "feuilleter" avec la touche bleue.
Les touches 1-4 déterminent le nombre des lignes de menu visibles.

3. Inversion entre modes service et TV

Les fonctions télévision normales ne sont pas utilisables en mode service. Si elles sont nécessaires en mode service (p. ex. changement de programme), la touche (**TV**) permet de commuter en mode TV. Vous pouvez revenir au mode service en appuyant sur la touche bleue.

4. Réglage des fonctions sélectionnées et mémorisation

La valeur momentanée de la fonction sélectionnée est indiquée sous forme hexadécimale à droite, à côté de la position à régler et peut être modifiée sur la télécommande par la touche + ou - .
Les modifications du menu concerné peuvent être mémorisées sous STORE avec la touche + ou réinitialisées sous RESTORE avec la touche +.
Les valeurs par défaut du logiciel peuvent être chargées dans le point de menu ROM. Elles ne constituent cependant qu'une approximation grossière du réglage restant à effectuer et ne doivent être utilisées qu'en cas de nécessité.

5. Abandon du mode service

Pour abandonner le mode service, commutez le téléviseur en position de veille ou mettez-le hors circuit par l'interrupteur secteur.

Code logiciel et configuration TV :

T	TEXT MODULE (32 PAGE)
TT	TOP TEXT MODULE (128 PAGE)
N	NICAM MODULE
M	MONO SOUND IF
P	PSI (PICTURE SIGNAL IMPROVEMENT)
Z	ZOOM MODULE
K	TELEFUNKEN TV (DETECTED BY SPECIAL KEYBOARD)
7	SUBCODE 7 (THOMSON) IS ALSO DETECTED
I	INFRARED LOCK MODE

Service-Mode Chassis ICC9

Il Service-Mode è necessario per l'allineamento dell'apparecchio. Tutte le regolazioni si effettuano con il telecomando. (a parte la tensione del sistema, le regolazione del fuoco e le tensioni della griglia schermo).

1. Attivazione del Service-Mode

1.1 Commutare il televisore in stand-by con il telecomando.
1.2 Spegnere l'apparecchio con l'interruttore di rete.
1.3 Tenere premuto il pulsante blu e accendere contemporaneamente l'apparecchio con l'interruttore di rete.
1.4 Il seguente menu appare non appena si aziona nuovamente il pulsante blu

SET-UP	VIDEO	GEOM
xxx 123456789		Configuration

Attenzione: Il Service-Mode non si può attivare se è attivato un apparecchio collegato alla presa di peritelevisione AV, cioè se è presente la tensione ausiliaria.

2. Scelta della funzione

Con i tasti +/- si seleziona il relativo menu che può "essere sfogliato" con il pulsante blu.
I pulsanti 1-4 definiscono il numero delle righe di menu visibili.

3. Commutazione fra funzione Service-Mode e TV

Nella modalità Service-Mode non si possono attivare le normali funzioni televisive. Se occorre richiamarle in Service-Mode (ad es. se si vuole cambiare il programma), si può attivare la normale modalità TV con il pulsante (**TV**). Premendo il pulsante blu si riattiva il Service-Mode.

4. Taratura della funzione scelta e memorizzazione

Il valore momentaneo della funzione scelta viene indicato in formato esadecimale a destra, accanto alla posizione da allineare e può essere cambiato con il pulsante + o - del telecomando.
Le modifiche effettuate nel relativo menu si possono memorizzare in STORE con il pulsante + oppure annullare in RESTORE con il pulsante +.
Nell'opzione di menu ROM si possono caricare i valori di default del software. Essi rappresentano però una taratura approssimativa prima di eseguire quella definitiva e si dovrebbero usare solo in caso di emergenza.

5. Disattivazione del Service-Mode

Per disattivare il Service-Mode, commutare l'apparecchio in stand-by o spegnerlo con l'interruttore di rete.

Codice software e configurazione TV:

T	TEXT MODULE (32 PAGE)
TT	TOP TEXT MODULE (128 PAGE)
N	NICAM MODULE
M	MONO SOUND IF
P	PSI (PICTURE SIGNAL IMPROVEMENT)
Z	ZOOM MODULE
K	TELEFUNKEN TV (DETECTED BY SPECIAL KEYBOARD)
7	SUBCODE 7 (THOMSON) IS ALSO DETECTED
I	INFRARED LOCK MODE

Service-Mode Chassis ICC9

Se necesita el Service-Mode para ajustar el aparato. Todos los ajustes se hacen con el mando a distancia (a excepción de la función del sistema, los ajustes del foco y las tensiones de la rejilla de pantalla).

1. Ajustar el Service-Mode

1.1 Con el mando a distancia conectar a reserva el televisor.
1.2 Desconectar el aparato con el interruptor de la red.
1.3 Mantener pulsada la tecla azul y conectar el aparato simultáneamente con el interruptor de red.
1.4 El menú siguiente aparece volviendo a pulsar la tecla azul.

SET-UP	VIDEO	GEOM
xxx 123456789		Configuration

Atención: No se puede conectar el Service-Mode cuando en Eurotoma-AV está activado un aparato, es decir, cuando existe tensión de conexión.

2. Selección de las funciones

Con las teclas +/- se selecciona el menú correspondiente que "hojea" con la tecla azul. Las teclas 1-4 fijan la cantidad de líneas visibles del menú.

3. Conmutar entre funcionamiento Service y TV

En el Service-Mode las funciones de televisión normales no pueden operarse. Si se necesitan éstas en Service-Mode (p.ej., cambio de programa), con la tecla (TV) puede conmutarse en la operación TV normal. Pulsando la tecla azul se vuelve al Service-Mode.

4. Ajuste de la función elegida y almacenamiento

El valor momentáneo de la función elegida es indicado de modo hexadecimal a la derecha, al lado de la posición a ajustar, y puede cambiarse con la tecla + o bien - en el mando a distancia. Los cambios del menú respectivo pueden almacenarse bajo STORE con la tecla + o bien anular bajo RESTORE y la tecla +.
En el punto de menú ROM se pueden cargar los valores Default del software. Sin embargo, son sólo una aproximación basta al ajuste aún a realizar y deben usarse sólo en caso de urgencia.

5. Salir del Service-Mode

Conmute el aparato a disposición a fin de salir del Service-Mode o desconectar con el interruptor de la red.

Código del software y configuración TV:

T	TEXT MODULE (32 PAGE)
TT	TOP TEXT MODULE (128 PAGE)
N	NICAM MODULE
M	MONO SOUND IF
P	PSI (PICTURE SIGNAL IMPROVEMENT)
Z	ZOOM MODULE
K	TELEFUNKEN TV (DETECTED BY SPECIAL KEYBOARD)
7	SUBCODE 7 (THOMSON) IS ALSO DETECTED
I	INFRARED LOCK MODE

Service-Einstellunge
Regolazioni die servi

Usystem	TV-Keypad +/- (Volume)	
U G2	G2	
Focus	F1 F2	

Example

SET-UP		
STD	BLI B BDLI BD I	
INVAR	ON OFF	
S-BRIGHT	..... |	
T-CONTR	..... | ..	
TEXT LANGUAGE	1 2 3 4	
S COLOUR	..... |	
< R >L	..... |	
SUBCODE7	ON OFF	
ZOOM	ON OFF	
STORE	(+)	
RESTORE	(+)	
ROM	(+)	

SET-UP		
STD	Standards: B = BG PAL-SECAM L = L SECAM(F), PAL Mirr D = DKK SECAM I = I PAL (UK / IRELAND)	
INVAR	ON / OFF	Auswähle Select
S-BRIGHT	(press OMA)	schwa black
T-CONTR	black Test pattern	PEAK - 30V IB01 Pin
T-LANG.	Video Text Language 1: GB, D, SF, I, F, E, C 2: PL, D, H, TR, YUG 3: GB, D, SF, I, F, IS, C 4: RSA, D, DK, TR, YU	
S-COLOR	PAL Color-Bar Test pattern (press OMA)	same le IB01 Pin
R> L	Über-sprechen Crosstalk	min.
SUBCODE 7	Enable Thomson remo control code (only for TFK-sets)	
ZOOM	Zoom-Modul	ON / OFF

Service-Mode Chassis ICC9

Il Service-Mode è necessario per l'allineamento dell'apparecchio. Tutte le regolazioni si effettuano con il telecomando. (a parte la tensione del sistema, le regolazione del fuoco e le tensioni della griglia schermo).

1. Attivazione del Service-Mode

1.1 Commutare il televisore in stand-by con il telecomando.
1.2 Spegnere l'apparecchio con l'interruttore di rete.
1.3 Tenere premuto il pulsante blu e accendere contemporaneamente l'apparecchio con l'interruttore di rete.
1.4 Il seguente menu appare non appena si aziona nuovamente il pulsante blu

SET-UP	VIDEO	GEOM
xxx 123456789		Configuration

Attenzione: Il Service-Mode non si può attivare se è attivato un apparecchio collegato alla presa di peritelevisione AV, cioè se è presente la tensione ausiliaria.

2. Scelta della funzione

Con i tasti +/- si seleziona il relativo menu che può "essere sfogliato" con il pulsante blu.
I pulsanti 1-4 definiscono il numero delle righe di menu visibili.

3. Commutazione fra funzione Service-Mode e TV

Nella modalità Service-Mode non si possono attivare le normali funzioni televisive. Se occorre richiamarle in Service-Mode (ad es. se si vuole cambiare il programma), si può attivare la normale modalità TV con il pulsante (**TV**). Premendo il pulsante blu si riattiva il Service-Mode.

4. Taratura della funzione scelta e memorizzazione

Il valore momentaneo della funzione scelta viene indicato in formato esadecimale a destra, accanto alla posizione da allineare e può essere cambiato con il pulsante + o - del telecomando.
Le modifiche effettuate nel relativo menu si possono memorizzare in STORE con il pulsante + oppure annullare in RESTORE con il pulsante +.
Nell'opzione di menu ROM si possono caricare i valori di default del software. Essi rappresentano però una taratura approssimativa prima di eseguire quella definitiva e si dovrebbero usare solo in caso di emergenza.

5. Disattivazione del Service-Mode

Per disattivare il Service-Mode, commutare l'apparecchio in stand-by o spegnerlo con l'interruttore di rete.

Codice software e configurazione TV:

T	TEXT MODULE (32 PAGE)
TT	TOP TEXT MODULE (128 PAGE)
N	NICAM MODULE
M	MONO SOUND IF
P	PSI (PICTURE SIGNAL IMPROVEMENT)
Z	ZOOM MODULE
K	TELEFUNKEN TV (DETECTED BY SPECIAL KEYBOARD)
7	SUBCODE 7 (THOMSON) IS ALSO DETECTED
I	INFRARED LOCK MODE

Service-Mode Chassis ICC9

Se necesita el Service-Mode para ajustar el aparato. Todos los ajustes se hacen con el mando a distancia (a excepción de la tensión del sistema, los ajustes del foco y las tensiones de la rejilla de pantalla).

1. Ajustar el Service-Mode

1.1 Con el mando a distancia conectar a reserva el televisor.
1.2 Desconectar el aparato con el interruptor de la red.
1.3 Mantener pulsada la tecla azul y conectar el aparato simultáneamente con el interruptor de red.
1.4 El menú siguiente aparece volviendo a pulsar la tecla azul.

SET-UP	VIDEO	GEOM
xxx 123456789		Configuration

Atención: No se puede conectar el Service-Mode cuando en Eurotoma-AV está activado un aparato, es decir, cuando existe tensión de conexión.

2. Selección de las funciones

Con las teclas +/- se selecciona el menú correspondiente que "hojea" con la tecla azul. Las teclas 1-4 fijan la cantidad de líneas visibles del menú.

3. Conmutar entre funcionamiento Service y TV

En el Service-Mode las funciones de televisión normales no pueden operarse. Si se necesitan éstas en Service-Mode (p.ej., cambio de programa), con la tecla (TV) puede conmutarse en la operación TV normal. Pulsando la tecla azul se vuelve al Service-Mode.

4. Ajuste de la función elegida y almacenamiento

El valor momentánec de la función elegida es indicado de modo hexadecimal a la derecha, al lado de la posición a ajustar, y puede cambiarse con la tecla + o bien - en el mando a distancia. Los cambios del menú respectivo pueden almacenarse bajo STORE con la tecla + o bien anular bajo RESTORE y la tecla +.
En el punto de menú ROM se pueden cargar los valores Default del software. Sin embargo, son sólo una aproximación basta al ajuste aún a realizar y deben usarse sólo en caso de urgencia.

5. Salir del Service-Mode

Conmute el aparato a disposición a fin de salir del Service-Mode o desconectar con el interruptor de la red.

Código del software y configuración TV:

T	TEXT MODULE (32 PAGE)
TT	TOP TEXT MODULE (128 PAGE)
N	NICAM MODULE
M	MONO SOUND IF
P	PSI (PICTURE SIGNAL IMPROVEMENT)
Z	ZOOM MODULE
K	TELEFUNKEN TV (DETECTED BY SPECIAL KEYBOARD)
7	SUBCODE 7 (THOMSON) IS ALSO DETECTED
I	INFRARED LOCK MODE

Service-Einstellungen · Service adjustments · Réglages de service Regolazioni die servizio · Ajustes de servicio

Usystem	TV-Keypad +/- (Volume)	Service-Mode Menü : GEOMETRIE - Volt	V DP61	154 V (21" 90° : 118V) (21" 110° : 145V)
U G2	G2	AV (no Signal, black screen) press OMA (standard values)	IB01 Pin 9,12,15 highest output	CRT 9000 / 9002 : 150V CRT 9001 / 9003 : 160V
Focus	F1 F2	Test pattern press OMA (standard values)		F1 (F2) if available

Example

SET-UP	
STD	BLI B BDLI BD I
INVAR	ON OFF
S-BRIGHT	.....|....
T-CONTR	.....|..
TEXT LANGUAGE	1 2 3 4
S COLOUR	.....|.....
< R >L	.....|.....
SUBCODE7	ON OFF
ZOOM	ON OFF
STORE	(+)
RESTORE	(+)
ROM	(+)

Example

VIDEO	
R-CUT	12
G-CUT	0B
R-DRV	1E
G-DRV	1C
PEAK	(-/+)
B-DRV	18
STORE	(+)
RESTORE	(+)
ROM	(+)

Example

GEOM	
VOLT	13
H-VCO	03
V-POS	07
V-AMP	4A
V-LIN	08
H-POS	0C
H-AMP	1F
TRAP	14
EW-1	15
EW-2	08
STORE	(+)
RESTORE	(+)
ROM	(+)

SET-UP		
STD	Standards: B = BG PAL-SECAM L = L SECAM(F), PAL Mirror (CH) D = DKK´ SECAM I = I PAL (UK / IRELAND)	
INVAR	ON / OFF	Auswählen Select
S-BRIGHT	(press OMA)	schwarz black
T-CONTR	black Test pattern	PEAK - 30V IB01 Pin 15
T-LANG.	Video Text Language 1: GB, D, SF, I, F, E, CZ, R 2: PL, D, H, TR, YUG 3: GB, D, SF, I, F, IS, CZ, R 4: RSA, D, DK, TR, YUG	
S-COLOR	PAL Color-Bar Test pattern (press OMA)	same level IB01 Pin 15
R> L	Über-sprechen Crosstalk	min.
SUBCODE 7	Enable Thomson remote control code (only for TFK-sets)	
ZOOM	Zoom-Modul	ON / OFF

VIDEO		
R-CUT		grau grey
G-CUT		grau grey
R-DRV		weiß white
G-DRV		weiß white
B-DRV		weiß white
PEAK	IB01 Pin 9,12,15	21" : 90V 25" : 95V 25" Invar : 100V 28" : 100V 28" Invar : 105V 29" : 100V 29" Invar : 110V 33" : 110V

GEOM		
Volt	Einstellung siehe oben	Adjustment see above
H-VCO	Channel 32 no Signal	IV01 Pin 32 15625 Hz ±100Hz
V.-Pos.		
V.-Amp		
V.-Lin		
H.-Pos		
H.-Amp		
Trap.		
EW-1		
EW-2		

Zoom

4:3 standard mode	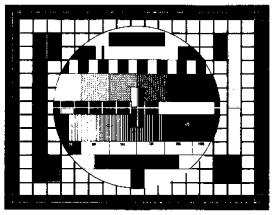	overscan : V = 107% , H = 107%
<4:3> zoom 1	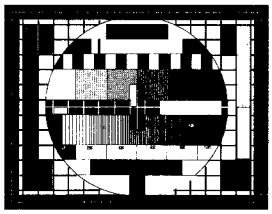	overscan V = 119% , H = 119%
<<4:3>> zoom 2	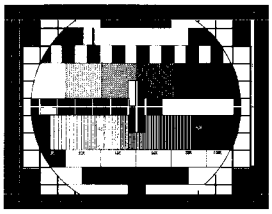	overscan : V = 137% , H = 137%
16 : 9 standard mode	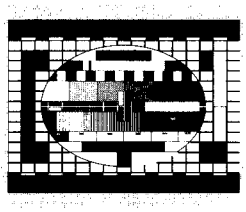	V = 80 % , (H = 107 %)
< 16 : 9 > zoom 1	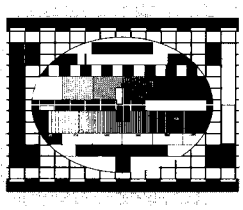	V = 89 % , (H = 119 %)
<< 16 : 9 >> zoom 2	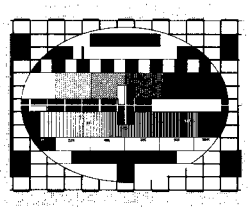	V = 107 % , (H = 137 %)

Ersatzteile · Spare parts list · Liste de pièces de rechange · Lista parti di ricambio Lista de piezas de recambio

Wichtig: Bei Ersatzteilbestellungen bitte unbedingt die entsprechende Bestellnummer angeben!
N. B.: When demanding Spare Parts it is absolutely necessary to quote the corresponding part number!
Importand: Lors d'une commande de pièces de rechange, prière d'indiquer et tout cas le numéro de la pièce!
Importante: Ordinare sempre con il numero correspondenti di codice!
Importante: Pedir siemple lis recambios con el numero correspondiente codigo!

Pos.	Art.-Nr. Part No.	Bezeichnung	Part
		MODULE/AUSTAUSCHTEILE:	**EXCHANGE PARTS:**
AMFM9215	100.088.50	AM/FM9215 LTP TON-MODUL	AM/FM9215 PCB SOUND
AMFM9315	100.532.20	AM/FM9315 LTP TON-MODUL	AM/FM9315 PCB SOUND
AMFM9415	100.532.30	AM/FM9415 LTP TON-MODUL	AM/FM9415 PCB SOUND
AMFM9615	100.685.70	AM/FM9615 LTP TON-MODUL	AM/FM9615 PCB SOUND
DVT9000	100.046.30	DVT9000 LTP VIDEOTEXT	DVT9000 PCB TELETEXT
DVT9001	100.046.40	DVT9001 LTP VIDEOTEXT	DVT9001 PCB TELETEXT
IF2139	243.057	IF2139.01 ZF-VERSTÄRKER	IF2139.01 UNIT, IF
IF2239	349.354.381	IF2239 ZF-VERSTAERKEKER	IF2239.01 UNIT IF
IF2248	349.354.416	IF2248 ZF-VERSTÄRKER	IF2248 UNIT, IF
IF2332	101.299.00	IF2332 ZF-VERSTÄRKER	IF2332 UNIT, IF
IF2339	101.298.40	IF2339 ZF-VERSTÄRKER	IF2339 UNIT
IF2343	100.969.80	IF2343 ZF-VERSTÄRKER	IF2343 UNIT
MTP2015	349.357.098	MTP-MM2015 TUNER (Hyperband)	MTP-MM2015 TUNER
MTP4015F	202.619.10	MTP4015F TUNER	MTP4015F TUNER
MTP4015F	202.576.50	MTP4015F TUNER VP	MTP4015F TUNER
ZOOM9620	100.666.90	ZOOM9620 LTP ZOOM	ZOOM9620 PCB ZOOM
ZOOM9680	100.844.90	ZOOM9680 LTP ZOOM	ZOOM9680 PCB ZOOM
ZOOM9690	101.602.10	ZOOM9690 LTP	ZOOM9690 PCB
		BAUGRUPPEN(KEIN AUSTAUSCH):	**MODULES:**
CRT9000	100.101.40	CRT9000 LTP BILDROHRANSCHLUSS	CRT9000 PCB CRT-SOCKET
CRT9001	100.665.40	CRT9001 LTP BILDROHRANSCHLUSS	CRT9001 PCB CRT-SOCKET
CRT9004	102.328.60	CRT9004 LTP BILDROHRANSCHLUSS	CRT9004 PCB CRT-SOCKET
NI9000	100.666.40	NI9000 LTP SUB NICAM	NI9000 PCB SUB
SUB	100.755.10	SUB 2H 9400 LTP	SUB 2H 9400 PCB
		CHASSIS-TEILE	**CHASSIS PARTS**
BA01	239.054	Stiftgehäuse, 12polig, natur UF	12 pin contact housing
BA02	110.807.20	Stiftgehäuse, 15polig, natur UF	15 pin contact housing
BA05	100.055.20	Buchse, Lautsprecher, MONO	Speaker jack
BA05	100.075.20	Buchse, Lautsprecher	Speaker jack
BL05	239.031	Stiftleiste, 3polig, blau UF	Contact strip, 3-pole, blue
BR01	309.650.061	Stiftleiste, 3polig, rot UF	Contact strip, 3-pole, red
BR02	260.789	Stiftleiste, 12polig, schwarz	Contact strip, 12-pole, black
BR03	266.713	Stiftleiste, 4polig, schwarz	Contact strip, 4-pole, black
BR05	604.307.75	Stiftgehäuse, 4polig, natur UF	4 pin contact housing, UF
BT04	309.650.091	Stiftleiste, 15polig, natur UF	Contact strip, 15-pole
BV01	509.029.80	Stiftgehäuse, 7polig, rot UF	7 pin contact housing
BX01	309.651.034	Buchse, Euro AV (SCART)	Scart socket
BX02	100.616.90	Abdeckung, Scart ICC9	Cover plug
BX02	309.651.034	Buchse, Euro AV (SCART)	Scart socket
BX03	243.598	Stiftleiste, 7polig, natur UF	7 pin wafer
BX50	309.650.092	Stiftleiste, 4polig, natur, liegend UF	Contact strip, 4-pole
CL07	207TX3125	0U01F 400V 5% Kondensator	0U01F 400V 5% Capacitor
CL11	239.322	10UF 250V 20% Elko	10UF 250V 20% E cap
CL12	243.879	330PF 400V 20% Keramik-Kondensator	330PF 400V 20% C cap
CL13	243.879	330PF 400V 20% Keramik-Kondensator	330PF 400V 20% C cap
CL21	256.986	12NF 1K5V 3,5% Filmkondensator	12NF 1K5V 3,5% Film cap
CL21	309.431.485	12N4F 1K6V 3,5% Filmkondensator	12N4F 1K6V 3,5% Film cap
CL21	309.433.767	13N1F 1K5V 3,5% MKP-Kondensator	13N1F 1K5V 3,5% MKPoly cap
CL22	266.240	26NF 400V 5% MKP-Kondensator	26NF 400V 5% MKPoly cap
CL22	309.433.772	20NF 400V 5% MKP-Kondensator	20NF 400V 5% MKPoly cap
CL22	803.058.00	22N0F 400V 5% Filmkondensator	22N0F 400V 5% Film cap
CL23	101.390.10	3N3F 400V 5% MP-Kondensator	3N3F 400V 5% MPoly cap
CL23	256.384	8N2F 400V 5% MP-Kondensator	8N2F 400V 5% MPoly cap
CL24	246.816	1UF 250V 10% Filmkondensator	1UF 250V 10% Film cap
CL27	100.779.60	510N0F 250V 5% Filmkondensator	510N0F 250V 5% Film cap
CL27	101.390.00	680N0F 250V 5% Filmkondensator	680N0F 250V 5% Film cap
CL27	309.434.626	360NF 250V 5% Filmkondensator	360NF 250V 5% Film cap
CL27	440.089	470NF 250V 5% MPP-Kondensator	470NF 250V 5% MPoly cap
CL40	101.211.70	3U3F 160V 20% Elko	3U3F 160V 20% E cap
CL42	101.220.40	4U7F 160V 20% Elko	4U7F 160V 20% E cap
CP01	239.351	68NF 250V 20% MP-Kondensator	68NF 250V 20% MPoly cap
CP07	309.442.972	1N5F 1KV Keramik-Kondensator	1N5F 1KV C cap
CP08	100.971.70	4N7F 1KV Keramik-Kondensator	4N7F 1KV C cap
CP09	100.971.70	4N7F 1KV Keramik-Kondensator	4N7F 1KV C cap
CP10	238.266	330PF 400V 20% Keramik-Kondensator	330PF 400V 20% C cap
CP11	100.993.90	470P0F 2KV Keramik-Kondensator	470P0F 2KV C cap
CP12	100.993.80	150P0F 2KV Keramik-Kondensator	150P0F 2KV C cap
CP13	309.460.614	2N2F 1KV 20% MPP-Kondensator	2N2F 1KV 20% MPoly cap
CP14	309.418.404	150UF 385V Elko	150UF 385V E cap
CP50	101.106.90	1N5F 400V 20% Keramik-Kondensator	1N5F 400V 20% C cap
CP62	266.247	100PF 1KV 20% Keramik-Kondensator	100PF 1KV 20% C cap
DA09	309.327.108	ZPD39 ZENER Diode	ZPD39 ZENER Diode
DA09	351.243.3000	ZPD30 ZENER Diode	ZPD30 ZENER Diode

Pos.	Art.-Nr. Part No.	Bezeichnung	Part
DC01	339.527.177	LL4148 SMD Diode	LL4148 SMD Diode
DF01	339.527.177	LL4148 SMD Diode	LL4148 SMD Diode
DF02	339.527.177	LL4148 SMD Diode	LL4148 SMD Diode
DF07	266.939	ZPD15V ZENER Diode	ZPD15V ZENER Diode
DF11	464.879	BAV21 Diode	BAV21 Diode
DF30	464.879	BAV21 Diode	BAV21 Diode
DF31	309.325.056	BA157 Diode SSW	BA157 Diode
DF32	339.527.177	LL4148 SMD Diode	LL4148 SMD Diode
DH01	276.644	ZPD33V 0,5W 5% ZENER Diode	ZPD33V 0,5W 5% ZENER Diode
DL11	309.325.056	BA157 Diode SSW	BA157 Diode
DL12	309.325.149	BY296 Diode	BY296 Diode
DL13	309.325.087	BY297 Diode	BY297 Diode
DL21	239.228	BY228 Diode mit Kühlfahne	BY228 Diode
DL22	266.280	BYW76 Diode	BYW76 Diode
DL26	309.325.056	BA157 Diode SSW	BA157 Diode
DL40	101.550.30	BAV103 SMD Diode	BAV103 SMD Diode
DL40	102.224.20	BAV203 SMD Diode	BAV203 SMD Diode
DL60	309.325.927	1N4148 Diode	1N4148 Diode
DL61	339.525.013	1N4001 Diode	1N4001 Diode
DL62	339.527.177	LL4148 SMD Diode	LL4148 SMD Diode
DL63	309.325.056	BA157 Diode SSW	BA157 Diode
DL64	339.525.013	1N4001 Diode	1N4001 Diode
DL65	339.527.177	LL4148 SMD Diode	LL4148 SMD Diode
DL66	339.525.013	1N4001 Diode	1N4001 Diode
DL67	339.525.013	1N4001 Diode	1N4001 Diode
DL68	339.525.013	1N4001 Diode	1N4001 Diode
DL69	339.525.013	1N4001 Diode	1N4001 Diode
DL70	339.525.013	1N4001 Diode	1N4001 Diode
DP02	309.325.163	BY255 Diode	BY255 Diode
DP03	309.325.163	BY255 Diode	BY255 Diode
DP04	309.325.163	BY255 Diode	BY255 Diode
DP05	309.325.163	BY255 Diode	BY255 Diode
DP10	309.325.056	BA157 Diode SSW	BA157 Diode
DP13	490.007.4145	MUR160 Diode	MUR160 Diode
DP17	339.525.013	1N4001 Diode	1N4001 Diode
DP18	339.525.013	1N4001 Diode	1N4001 Diode
DP19	339.525.013	1N4001 Diode	1N4001 Diode
DP23	309.325.056	BA157 Diode SSW	BA157 Diode
DP26	309.325.056	BA157 Diode SSW	BA157 Diode
DP30	339.527.177	LL4148 SMD Diode	LL4148 SMD Diode
DP31	339.527.177	LL4148 SMD Diode	LL4148 SMD Diode
DP34	339.525.013	1N4001 Diode	1N4001 Diode
DP35	339.527.177	LL4148 SMD Diode	LL4148 SMD Diode
DP36	339.527.177	LL4148 SMD Diode	LL4148 SMD Diode
DP41	309.325.927	1N4148 Diode	1N4148 Diode
DP51	309.325.927	1N4148 Diode	1N4148 Diode
DP54	309.325.056	BA157 Diode SSW	BA157 Diode
DP55	339.527.177	LL4148 SMD Diode	LL4148 SMD Diode
DP56	309.327.095	ZPD3,9 ZENER Diode	ZPD3,9 ZENER Diode
DP57	266.939	ZPD15V ZENER Diode	ZPD15V ZENER Diode
DP58	351.243.3000	ZPD30 ZENER Diode	ZPD30 ZENER Diode
DP59	339.527.177	LL4148 SMD Diode	LL4148 SMD Diode
DP61	266.469	BY399 Diode	BY399 Diode
DP63	339.527.063	BY396 Diode	BY396 Diode
DP65	339.529.957	ZPD24 ZENER Diode	ZPD24 ZENER Diode
DP66	339.527.177	LL4148 SMD Diode	LL4148 SMD Diode
DP67	339.527.177	LL4148 SMD Diode	LL4148 SMD Diode
DP68	339.529.794	ZPD3,3 ZENER Diode	ZPD3,3 ZENER Diode
DP72	100.983.00	ZPD68 Z-Diode	ZPD68 Z-Diode
DP72	309.327.145	ZPY82 ZENER Diode	ZPY82 ZENER Diode
DP73	339.527.063	BY396 Diode	BY396 Diode
DP76	339.527.177	LL4148 SMD Diode	LL4148 SMD Diode
DP77	339.527.177	LL4148 SMD Diode	LL4148 SMD Diode
DP79	339.527.177	LL4148 SMD Diode	LL4148 SMD Diode
DP80	309.325.927	1N4148 Diode	1N4148 Diode
DP81	339.527.177	LL4148 SMD Diode	LL4148 SMD Diode
DP82	266.469	BY399 Diode	BY399 Diode
DP83	339.527.177	LL4148 SMD Diode	LL4148 SMD Diode
DP84	339.525.013	1N4001 Diode	1N4001 Diode
DP87	339.527.177	LL4148 SMD Diode	LL4148 SMD Diode
DP88	339.527.177	LL4148 SMD Diode	LL4148 SMD Diode
DR27	309.327.124	ZPD2,7 ZENER Diode	ZPD2,7 ZENER Diode
DR42	339.527.177	LL4148 SMD Diode	LL4148 SMD Diode
DR84	339.527.177	LL4148 SMD Diode	LL4148 SMD Diode
DV01	339.525.013	1N4001 Diode	1N4001 Diode
DV03	309.325.927	1N4148 Diode	1N4148 Diode
DV26	339.527.177	LL4148 SMD Diode	LL4148 SMD Diode
DV31	339.527.177	LL4148 SMD Diode	LL4148 SMD Diode
DV32	309.325.125	BZX55C6V8 Diode	BZX55C6V8 Diode
DV34	339.527.177	LL4148 SMD Diode	LL4148 SMD Diode
DX01	339.527.177	LL4148 SMD Diode	LL4148 SMD Diode
DX03	339.527.177	LL4148 SMD Diode	LL4148 SMD Diode
IA01	100.080.50	TDA2614 IC	TDA2614 IC
IA01	100.080.60	TDA2616 IC	TDA2616 IC
IA01	261.825	Montageclip 1	Clip 1
IA01	309.903.844	Montageclip	Clip metal
IC01	100.078.80	XSTV2151AF IC	XSTV2151AF IC
IC01	674.567.00	IC-Fassung, 30polig	IC socket, 30pole
IC02	101.128.60	TDA4671 IC	TDA4671 IC
IF01	252.593	Silikonscheibe	Silicon plate
IF01	261.827	Montageclip	Clip
IF01	309.368.686	TDA8172 IC	TDA8172 IC
IP01	309.368.549	TEA2261 IC	TEA2261 IC
IP02	704.014.02	AN7809/MC7809 IC	AN7809/MC7809 IC
IP03	704.014.02	AN7809/MC7809 IC	AN7809/MC7809 IC
IR01	101.308.00	ST92T93B1/BJ IC prog. ohne Sockel	ST92T93B1/BJ IC
IR01	300.181.30	ST92T93B1/BJ IC prog. mit Sockel	ST92T93B1/BJ IC
IR01	101.772.90	ST9293J5B1/FU SOFT10/FT IC prog. o. S.	ST9293J5B1/FU IC
IR01	300.317.70	ST9293J5B1/FU SOFT10/FT IC prog. m. S.	ST9293J5B1/FU IC

Ersatzteile · Spare parts list · Liste de pièces de rechange · Lista parti di ricambio Lista de piezas de recambio

Wichtig: Bei Ersatzteilbestellungen bitte unbedingt die entsprechende Bestellnummer angeben!
N. B.: When demanding Spare Parts it is absolutely necessary to quote the corresponding part number!
Importand: Lors d'une commande de pièces de rechange, prière d'indiquer et tout cas le numéro de la pièce!
Importante: Ordinare sempre con il numero correspondenti di codice!
Importante: Pedir siemple lis recambios con el numero correspondiente codigo!

Pos.	Art.-Nr. Part No.	Bezeichnung	Part
IR01	101.773.00	ST9293J7B1/FP SOFT20/FP IC prog. o. S.	ST9293J7B1/FP IC
IR01	250.795.70	ST9293J7B1/FP SOFT20/FP IC prog. m. S.	ST9293J7B1/FP IC
IR01	300.342.30	ST9293J7B1/FP SOFT20/FP IC prog. m. S.	ST9293J7B1/FP IC
IR01	101.773.40	ST9293J7B1/XX SOFT25/FT IC prog. o. S.	ST9293J7B1/XX IC
IR01	300.342.50	ST9293J7B1/XX SOFT25/FT IC prog. m. S.	ST9293J7B1/XX IC
IR01	101.773.30	ST9293J7B1/XX SOFT25/TT IC prog. o. S.	ST9293J7B1/XX IC
IR01	300.342.40	ST9293J7B1/XX SOFT25/TT IC prog. m. S.	ST9293J7B1/XX IC
IR01	309.689.966	IC-Fassung, 42polig	IC socket, 42pole
IR02	243.022	IC-Fassung, 8polig	IC socket, 8pole
IR02	490.008.0379	X24C04 IC	X24C04 IC
IV01	110.391.62	XSTV2160SAF IC	XSTV2160SAF IC
IX01	309.368.217	MC14052BCP IC	MC14052BCP IC
LC01	339.349.708	10UH Drossel	10UH Choke coil
LC03	246.995	4U7H 10% Drossel	4U7H 10% Choke coil
LH02	100.940.40	5M5HZ 7X7 Filter	5M5HZ 7X7 Filter
LH03	246.995	4U7H 10% Drossel	4U7H 10% Choke coil
LH04	309.250.001	27UH 5% Drossel	27UH 5% Choke coil
LL05	100.066.20	Diodensplit-Trafo, C85MB	Diode split transformer
LL05	100.351.40	Diodensplit-Trafo, C85MB	Diode split transformer
LL05	100.897.40	Diodensplit-Trafo, C89	Diode split transformer
LL08	100.356.10	Kombi-Spule	Combi coil
LL08	100.926.90	Kombi-Spule	Combi coil
LL08	100.950.60	Kombi-Spule	Combi coil
LL10	339.349.708	10UH Drossel	10UH Choke coil
LL23	101.365.40	24UH 4% Drossel	24UH 4% Choke coil
LL23	309.249.314	48U5H Drossel	48U5H Choke coil
LL26	204.596.44	27UH Spule, Linearität	27UH Linearity coil
LL26	309.249.327	30UH Spule, H-Linearität	30UH H-Linearity coil
LL26	508.732.54	30U5H Spule, H-Linearität	30U5H H-Linearity coil
LL30	100.626.10	18U 10% Drossel	18U 10% Choke coil
LL30	260.804	35UH Spule	35UH Coil
LL30	309.250.006	23UH 4% Drossel	23UH 4% Choke coil
LL61	473.229.00	95UH 4% Drossel	95UH 4% Choke coil
LL63	246.773	2U2H 10% Drossel	2U2H 10% Choke coil
LP10	101.170.50	Trafo, Schaltnetzteil, SMT7	Switched mode power transformer
LP10	101.207.20	Trafo, Schaltnetzteil, SMT7 f. MONO	Switched mode power transformer
LP24	246.773	2U2H 10% Drossel	2U2H 10% Choke coil
LP44	309.309.989	Treibertransformator	Driver transformer
LR01	243.035	10UH 10% Drossel	10UH 10% Choke
LR71	339.349.710	4U7H Drossel	4U7H Choke coil
LR73	339.349.710	4U7H Drossel	4U7H Choke coil
LR75	339.349.710	4U7H Drossel	4U7H Choke coil
LR77	339.349.710	4U7H Drossel	4U7H Choke coil
QC01	100.877.10	4M433619HZ Quarz	4M433619HZ Crystal
QC02	100.877.20	3M579545HZ Quarz	3M579545HZ Crystal
QR01	101.191.40	22M0HZ Quarz	22M0HZ Crystal
RA01	100.379.00	8R2 0,5W 5% Sicherheitswiderstand	8R2 0,5W 5% Fusible resistor
RA03	100.379.00	8R2 0,5W 5% Sicherheitswiderstand	8R2 0,5W 5% Fusible resistor
RC20	339.537.716	10R 0,3W 5% Sicherheitswiderstand	10R 0,3W 5% Fusible resistor
RC23	339.537.716	10R 0,3W 5% Sicherheitswiderstand	10R 0,3W 5% Fusible resistor
RC24	339.537.716	10R 0,3W 5% Sicherheitswiderstand	10R 0,3W 5% Fusible resistor
RC25	339.537.716	10R 0,3W 5% Sicherheitswiderstand	10R 0,3W 5% Fusible resistor
RC33	339.537.717	1R 0,3W 5% Sicherheitswiderstand	1R 0,3W 5% Fusible resistor
RF11	309.580.973	1R5 0,5W 5% Sicherheitswiderstand	1R5 0,5W 5% Fusible resistor
RF12	309.530.698	1R 0,7W 5% Metalloxydwiderstand	1R 0,7W 5% Metal oxide resistor
RF15	108.833.00	10R 0,5W 5% Sicherheitswiderstand	10R 0,5W 5% Fusible resistor
RF20	102.337.20	220R 0,7W 1% Metallfilmwiderstand	220R 0,7W 1% Metal film resistor
RF21	309.580.973	1R5 0,5W 5% Sicherheitswiderstand	1R5 0,5W 5% Fusible resistor
RH12	309.580.955	22R 0,3W 5% Sicherheitswiderstand	22R 0,3W 5% Fusible resistor
RH13	339.537.716	10R 0,3W 5% Sicherheitswiderstand	10R 0,3W 5% Fusible resistor
RL03	309.580.974	0R1 0,4W 10% Sicherheitswiderstand	0R1 0,4W 10% Fusible resistor
RL09	101.477.20	69K8 0,7W 1% Metallfilmwiderstand	69K8 0,7W 1% Metal film resistor
RL09	101.477.40	68K1R 0,7W 1% Metallfilmwiderstand	68K1R 0,7W 1% Metal film resistor
RL09	101.480.60	80K6R 0,7W 1% Metallfilmwiderstand	80K6R 0,7W 1% Metal film resistor
RL09	101.481.30	64K9R 0,7W 1% Metallfilmwiderstand	64K9R 0,7W 1% Metal film resistor
RL09	101.490.50	88K7R 0,7W 1% Metallfilmwiderstand	88K7R 0,7W 1% Metal film resistor
RL09	101.533.90	95K3R 0,7W 1% Metallfilmwiderstand	95K3R 0,7W 1% Metal film resistor
RL09	102.242.30	61K9R 0,7W 1% Metallfilmwiderstand	61K9R 0,7W 1% Metal film resistor
RL09	102.244.40	60K4R 0,7W 1% Metallfilmwiderstand	60K4R 0,7W 1% Metal film resistor
RL11	309.580.969	15R 0,5W 5% Sicherheitswiderstand	15R 0,5W 5% Fusible resistor
RL12	413.073.01	73K2R 0,4W 1% Metallfilmwiderstand	73K2R 0,4W 1% Metal film resistor
RL13	309.537.848	39K2R 0,4W 1% Metallfilmwiderstand	39K2R 0,4W 1% Metal film resistor
RL13	413.068.01	64K9R 0,4W 1% Metallfilmwiderstand	64K9R 0,4W 1% Metal film resistor
RL13	413.073.01	73K2R 0,4W 1% Metallfilmwiderstand	73K2R 0,4W 1% Metal film resistor
RL14	101.512.70	56K 2W 10% Metalloxidwiderstand	56K 2W 10% Oxide metal resistor
RL23	243.840	27R 3W 5% Drahtwiderstand	27R 3W 5% Wire resistor
RL23	243.901	120R 2W 5% Metalloxydwiderstand	120R 2W 5% Metal oxide resistor
RL26	309.580.952	1KR 0,5W 10% Sicherheitswiderstand	1KR 0,5W 10% Fusible resistor
RL30	101.513.10	4K7 0,7W 5% Sicherheitswiderstand, NB	4K7 0,7W 5% Fusible resistor
RL40	411.287.01	16K2R 0,4W 1% Metallfilmwiderstand	16K2R 0,4W 1% Metal film resistor
RL45	411.198.02	3R3 0,35W 5% Sicherheitswiderstand	3R3 0,35W 5% Fusible resistor
RL50	309.580.974	0R1 0,4W 10% Sicherheitswiderstand	0R1 0,4W 10% Fusible resistor
RP01	309.560.952	25R PTC-Widerstand	25R PTC resistor
RP07	309.537.650	39K 4W 10% Metalloxydwiderstand	39K 4W 10% Metal oxide resistor
RP10	243.798	0R33 0,4W 10% Sicherheitswiderstand	0R33 0,4W 10% Fusible resistor
RP13	100.094.20	270R 10W 10% Drahtwiderstand	270R 10W 10% Wire resistor
RP41	101.513.20	18R 2W 5% Metalloxidwiderstand	18R 2W 5% Oxide metal resistor
RP50	309.530.716	10M 0,7W 5% Schichtwiderstand	10M 0,7W 5% Film resistor
RP69	101.513.30	0R27 1,5W 5% Metalloxidwiderstand	0R27 1,5W 5% Oxide metal resistor
RP69	101.513.40	0R56 1,5W 5% Metalloxidwiderstand	0R56 1,5W 5% Oxide metal resistor
RR01	309.580.974	0R1 0,4W 10% Sicherheitswiderstand	0R1 0,4W 10% Fusible resistor

Pos.	Art.-Nr. Part No.	Bezeichnung	Part
RV01	339.537.716	10R 0,3W 5% Sicherheitswiderstand	10R 0,3W 5% Fusible resistor
RV32	413.033.01	22K1R 0,4W 1% Metallfilmwiderstand	22K1R 0,4W 1% Metal film resistor
RV32	413.443.01	4K75 0,25W 1% Metallfilmwiderstand	4K75 0,25W 1% Metal film resistor
RX24	411.174.01	475R 0,4W 1% Metallfilmwiderstand	475R 0,4W 1% Metal film resistor
RX25	412.839.01	82R5 0,4W 1% Metallfilmwiderstand	82R5 0,4W 1% Metal film resistor
RX33	339.537.716	10R 0,3W 5% Sicherheitswiderstand	10R 0,3W 5% Fusible resistor
RX48	339.537.716	10R 0,3W 5% Sicherheitswiderstand	10R 0,3W 5% Fusible resistor
RX54	412.433.01	150K 0,4W 1% Metallfilmwiderstand	150K 0,4W 1% Metal film resistor
RX91	339.537.716	10R 0,3W 5% Sicherheitswiderstand	10R 0,3W 5% Fusible resistor
RX95	339.537.716	10R 0,3W 5% Sicherheitswiderstand	10R 0,3W 5% Fusible resistor
TA01	261.825	Montageclip 1	Clip 1
TA01	309.001.351	BD242 Transistor	BD242 Transistor
TA02	339.555.241	BC848B SMD Transistor	BC848B SMD Transistor
TA20	339.555.241	BC848B SMD Transistor	BC848B SMD Transistor
TC01	309.001.246	BC368 Transistor	BC368 Transistor
TC01	339.556.898	BC337-40 Transistor	BC337-40 Transistor
TC02	339.555.241	BC848B SMD Transistor	BC848B SMD Transistor
TC03	249.250	BC858B SMD Transistor	BC858B SMD Transistor
TC04	339.555.241	BC848B SMD Transistor	BC848B SMD Transistor
TH01	339.555.241	BC848B SMD Transistor	BC848B SMD Transistor
TH03	249.250	BC858B SMD Transistor	BC858B SMD Transistor
TH04	249.250	BC858B SMD Transistor	BC858B SMD Transistor
TH05	339.555.241	BC848B SMD Transistor	BC848B SMD Transistor
TL19	261.825	Montageclip 1	Clip 1
TL19	309.001.371	BUH517 Transistor	BUH517 Transistor
TL19	309.005.029	BUH515 Transistor	BUH515 Transistor
TL40	252.593	Silikonscheibe	Silicon plate
TL40	450.493.00	BD681 Transistor	BD681 Transistor
TL40	703.966.00	Montageclip	Clip
TL51	309.368.470	UA7805CSP IC	UA7805CSP IC
TL60	339.555.241	BC848B SMD Transistor	BC848B SMD Transistor
TL61	101.176.70	2SC2655Y Transistor	2SC2655Y Transistor
TL62	242.866	2SA1020Y Transistor	2SA1020Y Transistor
TL63	339.555.241	BC848B SMD Transistor	BC848B SMD Transistor
TL64	249.250	BC858B SMD Transistor	BC858B SMD Transistor
TL65	273.209	BC327-40 Transistor	BC327-40 Transistor
TP10	261.825	Montageclip 1	Clip 1
TP10	309.001.390	BUH713 Transistor	BUH713 Transistor
TP34	339.555.241	BC848B SMD Transistor	BC848B SMD Transistor
TP52	339.555.241	BC848B SMD Transistor	BC848B SMD Transistor
TP54	463.077	BF422 Transistor	BF422 Transistor
TP66	249.250	BC858B SMD Transistor	BC858B SMD Transistor
TP67	339.555.241	BC848B SMD Transistor	BC848B SMD Transistor
TP69	339.555.241	BC848B SMD Transistor	BC848B SMD Transistor
TP76	463.077	BF422 Transistor	BF422 Transistor
TP77	339.555.241	BC848B SMD Transistor	BC848B SMD Transistor
TP78	339.555.241	BC848B SMD Transistor	BC848B SMD Transistor
TR20	339.555.241	BC848B SMD Transistor	BC848B SMD Transistor
TR22	339.555.241	BC848B SMD Transistor	BC848B SMD Transistor
TR27	339.555.241	BC848B SMD Transistor	BC848B SMD Transistor
TR28	249.250	BC858B SMD Transistor	BC858B SMD Transistor
TR42	339.555.241	BC848B SMD Transistor	BC848B SMD Transistor
TR55	339.555.241	BC848B SMD Transistor	BC848B SMD Transistor
TR60	309.001.246	BC368 Transistor	BC368 Transistor
TR81	249.250	BC858B SMD Transistor	BC858B SMD Transistor
TR85	339.555.241	BC848B SMD Transistor	BC848B SMD Transistor
TR87	249.250	BC858B SMD Transistor	BC858B SMD Transistor
TR90	339.555.241	BC848B SMD Transistor	BC848B SMD Transistor
TV06	339.556.787	BC337-40 Transistor	BC337-40 Transistor
TV71	249.250	BC858B SMD Transistor	BC858B SMD Transistor
TV76	249.250	BC858B SMD Transistor	BC858B SMD Transistor
TV81	249.250	BC858B SMD Transistor	BC858B SMD Transistor
TX03	339.555.241	BC848B SMD Transistor	BC848B SMD Transistor
TX04	249.250	BC858B SMD Transistor	BC858B SMD Transistor
TX05	339.556.222	BC547B Transistor	BC547B Transistor
TX06	339.556.222	BC547B Transistor	BC547B Transistor
TX07	339.555.241	BC848B SMD Transistor	BC848B SMD Transistor
TX08	249.250	BC858B SMD Transistor	BC858B SMD Transistor
TX09	249.250	BC858B SMD Transistor	BC858B SMD Transistor
TX10	249.250	BC858B SMD Transistor	BC858B SMD Transistor
TX11	249.250	BC858B SMD Transistor	BC858B SMD Transistor
TX12	249.250	BC858B SMD Transistor	BC858B SMD Transistor
TX13	249.250	BC858B SMD Transistor	BC858B SMD Transistor
TX14	339.555.241	BC848B SMD Transistor	BC848B SMD Transistor
TX15	339.555.241	BC848B SMD Transistor	BC848B SMD Transistor
TX16	249.250	BC858B SMD Transistor	BC858B SMD Transistor
TX17	249.250	BC858B SMD Transistor	BC858B SMD Transistor
TX18	339.555.241	BC848B SMD Transistor	BC848B SMD Transistor
-	100.616.90	Abdeckung, Scart ICC9	Cover plug
-	100.636.30	Modulhalter, NICAM ICC9	Module holder
-	101.101.90	Leitung mit Stecker, 4polig, 500mm vom CHASSIS zum ZOOM	Cable with socket, 4-pole, 500mm
-	101.210.40	Halter für Kabel/DST	Cable holder
-	101.217.70	Modulhalter, DVT/AMFM	Module holder
-	101.258.10	Leitung mit Stecker, 7polig, 340mm vom CHASSIS zum CRT	Cable with socket, 7-pole, 340mm
-	101.325.50	Leitung mit Stecker, 3polig, 340mm vom CHASSIS zum CRT	Cable with socket, 3-pole, 340mm
-	102.439.90	Leitung mit Stecker, 4polig, 460mm vom CHASSIS zum ZOOM	Cable with socket, 4-pole, 460mm
-	246.895	Chassis-Rahmen	Chassis frame
-	256.704	Modulhalter, (Nord-Süd)	Module holder
-	309.699.432	Hochspannungskabel, Anode	High tension cable
-	309.699.434	Focuskabel, 460mm	Focus cable, 460mm
-	309.863.511	Chassis-Rahmen Konz. 6mm	Chassis frame
-	309.900.528	Halter, VT-ZOOM	Holder vt-zoom
-	309.902.930	Kabelhalter, THT/DST	Cable holder
-	309.902.931	Kabelhalter, Fokusleitung	Cable holder, focus cable
-	309.951.978	Schutzkappe für Hochspannungskabel	Protection cap for high voltage cable
-	309.951.997	Schutzkappe für CP49/50	Protection cap

Sicherheitsvorschriften

Servicearbeiten an Fernsehgeräten dürfen nur von unterwiesenem Fachpersonal ausgeführt werden. Dabei soll das Gerät über einen Trenntransformator betrieben werden.
Die Sicherheitsbestimmungen nach VDE 0860 H sind bei der Reparatur unbedingt zu beachten, u.a.

- dürfen die konstruktiven Merkmale des Gerätes nicht sicherheitsmindernd verändert werden, so z.B. Abdeckungen, mechanisch gesicherte Leitungen, Kriech- und Luftstrecken.
- müssen Einbauteile – wie nichtbrennbare Widerstände (NB), Sicherungswiderstände, Widerstände zwischen berührbaren Metallteilen und berührungsgefährlichen Spannungen (z.B. Schaltkontaktplatten), Sicherungen usw. – den Original-Ersatzteilen entsprechen und wieder fachgerecht (Fabrikationszustand) eingebaut werden.

⚠ **Sicherheitsbauteile nur gegen Original-Ersatzteile auswechseln!**

Precrizioni di sicurezza

Le operazioni di servizio sul TV devono essere eseguite solo da personale specializzato. L'apparecchio deve essere alimentato tramite un trasformatore separatore. Il riparatore deve prestare particolari attenzioni alla NORME di sicurezza I E C.

- Non devono essere modificati i criteri costruttivi dell'apparecchio riguardanti la sicurezza. Es. schermi, fili con isolamenti speciali e scaricatori.
- I componenti (es.: resistenze non infiammabili, resistenze fusibili, resistenze tra parti metalliche e/o collegate a tensioni pericolose – per es.: basetta di commutazione – condensatori di sicurezza e di protezione, cavo di rete, interruttore di rete, cinescopio ecc.), corrispondere ai ricambi originali e devono essere montati a regola d'arte.

⚠ **Componenti di sicurezza devono essere sostituiti solamente con ricambi originali.**

Safety regulations

Service work on television receivers may be carried out only by skilled specialists. The unit should be powered with an isolating transformater when doing so. The safety regulations as per VDE 0680 H are to be observed unconditionally during repairs. Among these are

- The design characteristics of the receiver may not be modified in such a way as to reduce operational safety, examples are covers, cages, mechanically protected cables, air gaps, leakage paths.
- Componends – such as non flammable resistors (NB), fusistors, resistors between metal parts which can be touched and dangerous voltages (such as switch contact sensors), fuses, etc. – should be replaced only with original-equipment parts, they must be installed so that after the repair the unit corresponds to the state in which it left the factory.

⚠ **Replace safety components only with Original spare parts!**

Medidas de seguridad

Las intervenciones del servicio de reparación solamente deben ser efectuadas por personal especializado.

El aparato debe ser alimentado a través de un transformador aislador de red. Observar estrictamente las normas de seguridad (VDE 0860 H).

- Las características de los aparatos no deben ser modificadas (por ejemplo: blindajes, cables fijados mecanicamente, protectores o aisladores, separaciones entre componentes, etc.).
- En caso de substitución de componentes, utilizar solamente repuestos originales equivalentes (Ejemplo: Resistencias fusible, resistencias entre partes metálicas y voltajes peligrosos, condensadores de seguridad o de protección), montados adecuadamente para obtener el mismo nivel de seguridad que trae de fábrica.

⚠ **Reemplazar los componentes de seguridad solo con recambios originales.**

Mesures de Securité

Les interventions de dépannage sur les téléviseurs doivent être effectuées seulement par des techniques compétents.

Il est fortement conseillé d'intercaler entre l'appareil et le secteur un transformateur d'isolement.

Les normes de sécurité suivant VDE 0860 H sont à observer strictement.

Les caractéristiques des appareils ne doivent pas être modifiées. (Par exemple: blindage, câbles fixés mécaniquement, positionnement des composants.)

Lors d'un dépannage il faut respecter impérativement les listes d'équivalerice. (Par exemple: résistance fusible, câble secteur, interrupteur, tube cathodique, etc.)

⚠ **Ne remplacer les composants de sécurité que par des composants originaux!**

Diese Angaben und Hinweise sind ausschließlich für den Service des Fachhändlers bestimmt · Änderungen vorbehalten · Sämtliche Urheberrechte an diesen Texten und Zeichnungen stehen uns zu. Nachdrucke, Vervielfältigung – auch auszugsweise – nur mit unserer vorherigen Zustimmung zulässig. Alle Rechte vorbehalten · Questi dati e queste istruziono sono riservati ai tecnici del servizio assistenza · Con riserva di modifiche · These instructions are for service dealers only · Subject to modification.

Änderungen vorbehalten · Subject to change · Modifications réservées · Con riserva di modifiche · Reservado derecho de modificacion

Thomson Consumer Electronics GmbH & Co. oHG
– Service –
Göttinger Chaussee 76
30453 Hannover (Germany)

Tocom Nr. 102.675.70 9406 / Doku